TEXAS TRANSPORTATION INSTITUTE
THE TEXAS A&M UNIVERSITY SYSTEM

Project Summary Report 4149-S

Project 0-4149: Feasibility of Utility Corridor Structures in TxDOT Right-of-Way

Authors: Beverly Kuhn, P.E., Robert Brydia, Debbie Jasek, Angelia Parham, P.E., Brooke Ullman, and Byron Blaschke, P.E.

PROJECT SUMMARY REPORT

Utility Accommodation Options for Congestion in TxDOT Right-Of-Way

Like many states, Texas faces increasing utility congestion in the right-of-way (ROW) of the roadways it builds and maintains. The existing Texas Utilities Accommodation Policy (UAP), as outlined in the Texas Administrative Code, provides guidelines for accommodating public utilities within highway right-of-way. These utilities include natural gas, water, electricity, telecommunications, cable television, salt water, and common carrier petroleum and petroleum-related products.

As deregulation of the utility industry has taken effect, the influx of newly formed utility companies has resulted in greatly increased demand for access to right-of-way. This growth and expansion of underground utilities in urban areas also results in increased demand and increased competition for the space available on highway right-of-way for public utilities. As utility congestion has increased, focus has been placed on finding methods of increasing or at least maintaining the space available to utilities, while at the same time addressing the concerns listed above. One proposed solution is that of a utility corridor structure that houses numerous utilities in a small space.

What We Did...

This project explored the feasibility of creating utility corridors within Texas Department of Transportation (TxDOT) rights-of-way to:

- provide reasonable access to right-of-way by public utilities;
- allow TxDOT to manage its right-of-way in a more effective manner; and
- provide a mechanism for TxDOT to recoup some or all of the costs associated with engineering, constructing, and maintaining utility corridors.

Researchers began with a broad scope to:

- gather knowledge from diverse sources with a comprehensive literature review;
- investigate the practices of other state departments of transportation regarding the design, construction, leasing, maintenance, legal, and revenue-generating issues of utility corridors through telephone interviews and by reviewing utility accommodation policies from various states, including Texas; and
- gather detailed information from a task force of stakeholders in the utility process within Texas.

This "insider" information served to pare down the broad knowledge resources and identify what will and will not work within Texas. The information also sought to identify particular issues of concern, such as compatibility, leasing, maintenance, expansion, and relocation.

Of critical note within the research process was a review of the existing Texas statutes and UAP. The purpose of the review was to determine what changes are necessary to support a utility corridor concept from design, construction, maintenance, and revenue standpoints. Finally, researchers focused on preparing specific recommendations for:

- the use of utility corridors and other utility accommodation strategies,
- necessary changes to the Texas statutes and UAP,
- a draft occupancy agreement for utilities in utility corridor structures, and
- preliminary specifications and design drawings for such structures.

What We Found ...

Joint trenching, multi-duct conduits, and utility corridor structures are feasible alternatives that TxDOT can utilize to accomplish more effective ROW management. Each of these alternatives has significant pros and cons, which are listed in Table 1. Of primary interest,

Alternatives	Advantages and Disadvantages
Joint Trenching	• Lower installation and maintenance costs • Accommodates multiple utilities • Positive impacts on safety and construction • Requires less ROW • Shorter construction and inspection time • Better long-term identification and tracking of utilities within ROW • Minimizes impact on the environment • Better in areas where the type of soil involves expensive excavation costs
	• Is uncommon in underground facilities • Needs detailed coordination between utilities for successful completion • Complicates agreements for design parameters and shared costs • Requires one utility to take a leadership role in design and construction
Multi-Duct Conduit	• Accommodates multiple utilities at less cost than multiple installations • Plans and installs future growth at minimum cost • Requires less ROW • Positively impacts safety and construction • May allow trenchless boring through installation techniques • Heavily used in underground installations • Requires less ROW • Requires shorter construction times
	• Is feasible only for compatible utilities • May be difficult to estimate size for future growth • Needs detailed coordination between utilities for successful completion • Complicates agreements for design parameters and shared costs • Requires one utility to take a leadership role in design and construction
Utility Corridor Structure 1)Telecom and compatible utilities 2)Most or all utilities	• May minimize total ROW necessary • Assures known locations for all telecommunication facilities • Reduces overall construction and installation time • Enables planning for significant future growth by all utilities • Reduces repair time in the event of a break or malfunction • Minimizes impact from adjacent construction activities
	• May be considerably more expensive than joint trenching or multi-duct conduits • Large structures may require more ROW than other methods • Requires designs to include additional items not typically addressed in utility installations such as lighting, ventilation, and drainage • Requires planning to transition from traditional utility • Requires specific spacing, location, and casing requirements for non-compatible utilities • Needs detailed coordination between utilities for successful completion • Complicates agreements for design parameters and shared costs • Requires one utility to take a leadership role in design and construction • Requires long-term strategies for maintenance and repair procedures • May create significant security concerns

Table 1. Advantages and Disadvantages of Utility Accommodation Alternatives.

however, are recommendations for when it is feasible to use each method of accommodating utility needs. Table 2 summarizes these criteria and highlights several generic conditions, such as rural versus urban corridors, and indicates which treatment would be best for those considerations. In general, because of the significant additional cost of building utility corridor structures, the researchers believe that their use is not warranted except in those conditions where ROW is already constrained, and significant ROW acquisition savings can offset the cost of the utility corridor structure. Both TxDOT and participating utilities must recognize the long-term maintenance and security issues associated with the design and construction of such a facility.

Utility Accommodation Alternative	Rural ROW	Urban Constrained ROW with Compatible Utilities	Urban Constrained ROW with Non-Compatible Utilities
Joint Trenching	✓	✓	✓
Multi-Duct Conduit	✓	✓	
Utility Corridor Structure for Telecommunications		✓	✓
Utility Corridor Structure for Most or All Utilities		✓	

Table 2. Recommended Utility Accommodation Alternatives.

The researchers developed specifications and design guidelines for utility corridor structures for appropriate installations. Figures 1 and 2 illustrate the Case I and Case II utility corridor structures, respectively.

Utility corridor structures must meet the requirements of TxDOT ITEM 462: Concrete Box Culverts and Storm Drains. Additionally, the following design considerations should be met, depending upon TxDOT requirements:

- The structural design shall be based on the size of the corridor.
- A sump pump may be needed to prevent water from standing around the duct.
- The profile of the structure should

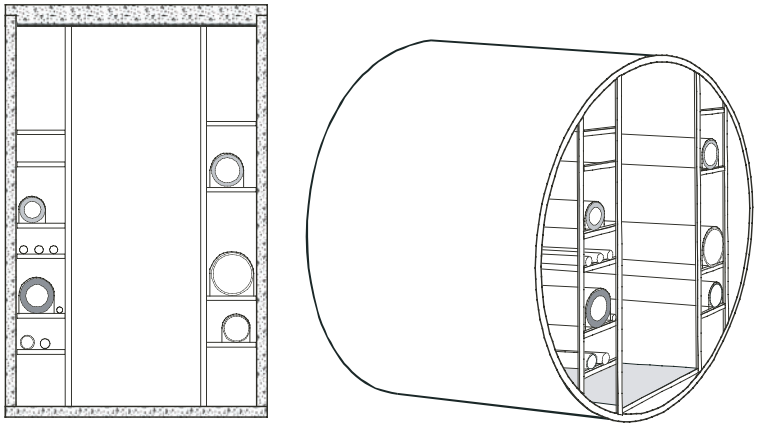

Figure 1. Case I: Two Examples of Utility Corridor Structures with Walkway Accessibility.

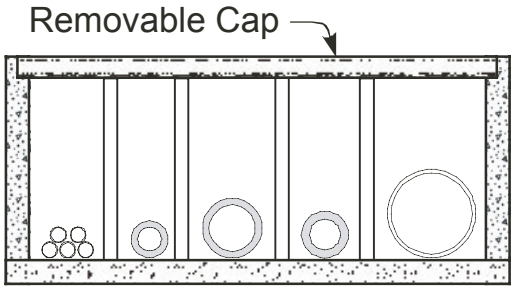

Figure 2. Case II: Small Utility Corridor Structure with Limited Accessibility.

facilitate drainage. Access should be provided at or near low points, and a drain should be installed where practical.

- Hangers and/or shelves should be designed and spaced based upon the type of utility line to be supported. Flexible lines may require a full-length shelf for support.
- The structures should be waterproofed as per TxDOT specifications.

Utility corridor structures may be designed as:

- Case I: large structures that provide a corridor as a walkway throughout the facility, or
- Case II: smaller structures without a walkway and with accessibility provided at designated intervals by removal of the deck.

Additional Case I considerations include:

- Case I structures may be corrugated metal pipe (60 to 90 in) or a concrete box culvert, pre-cast or cast in place as per TxDOT specifications, with a minimum height of 6 ft 0 in and a desirable height of 6 ft 5 in.
- The aisle width for Case I structures should be 30 in at a minimum and, desirably, should be 36 in.
- Case I structures should provide access points at 500- to 1000-ft intervals, depending upon the types of utilities to be installed.

Additional Case II considerations include:

- Case II structures shall be designed so they can be accessed through a structure deck by lifting the deck with proper equipment.
- Case II structures should have an additional waterproof seal on the removable top.
- For large Case II structures, extra reinforcing steel may be required because the structure walls basically serve as a retaining wall when the deck is removed.

The Researchers Recommend...

This project highlights the use of utility corridor structures as an important development in utility accommodation. In general, utility corridor structures can be useful in situations where existing utility congestion or severe limitations on available ROW offset the increased costs of building the structure. However, the issue of compatible utilities plays a role in assessing the potential use of a utility corridor structure. Currently, significant impediments to utilizing this strategy in Texas exist with the need for several legislative changes, including the acquisition of ROW, lease and occupancy agreements, and revenue potential. Products from the project include basic guidelines for choosing an accommodation strategy, sample specifications, and design drawings.

The research team also prepared sample legislation and draft changes to the Utility Accommodation Policy, focusing on giving TxDOT the legislative authority to pursue the use of utility corridors and ROW acquisition for same, when warranted. These are all significant advances for the purpose of TxDOT accommodating utilities within the ROW. Where utility corridor structures are not practical, TxDOT can consider requiring public utilities to use either multi-duct conduit or joint trenching to lower costs, reduce installation time, and more efficiently utilize the available ROW.

While this feasibility study has highlighted the various possibilities and general conditions of use, more detailed analysis is required to definitively choose a particular accommodation policy for any given situation. Detailed benefit-cost information on a project-by-project basis is necessary to support the choices made for various accommodation needs.

For More Details . . .

The research is documented in:
Report 4149-1, *Utility Corridor Structures and Other Utility Accommodation Alternatives in TxDOT Right-of-Way*

Research Supervisor: Beverly Kuhn, Ph.D., P.E., b-kuhn@tamu.edu, (979) 862-3558

Researchers: Robert Brydia, r-brydia@tamu.edu, (979) 845-8140
Debbie Jasek, d-jasek@tamu.edu, (979) 845-5239
Angelia Parham, P.E., a-parham@tamu.edu, (979) 845-9878
Brooke Ullman, b-ullman@tamu.edu, (979) 862-6636
Byron Blaschke, P.E., bblaschk@tamu.edu, (979) 845-5724

TxDOT Project Director: Gary Ray, TxDOT Houston District, gray@dot.state.tx.us, (713) 802-5953

To obtain copies of reports, contact Dolores Hott, Texas Transportation Institute, Information and Technology Exchange Center, (979) 845-4853, or e-mail d-hott@tamu.edu. See our online catalog at http://tti.tamu.edu.

TxDOT Implementation Status
June 2003

The research explored the feasibility of creating utility corridors within TxDOT ROW. The research evaluated the policy, economics, and partnership issues associated with proposed utility corridors. This research will serve as the foundation of future utility corridor exploration by TxDOT.

For more information, contact Bill Knowles, RTI Research Engineer, at (512) 465-7648 or email wknowle@dot.state.tx.us.

YOUR INVOLVEMENT IS WELCOME!

Disclaimer