SAFER BRIDGE RAILINGS

VOLUME 2: APPENDICES

Prepared for

Office of Research

Federal Highway Administration

U. S. Department of Transportation

by

Eugene Buth
Research Engineer

James S. Noel
Associate Research Engineer

Althea G. Arnold
Research Associate

T. J. Hirsch
Research Engineer

Texas A&M Research Foundation

Texas Transportation Institute

The Texas A&M University System

December 1980

NOTICE

This document is disseminated under the sponsorship of the Department of Transportation in the interest of information exchange. The United States Government assumes no liability for its contents or use thereof.

The contents of this report reflect the views of the Texas Transportation Institute, which is responsible for the facts and the accuracy of the data presented herein. The contents do not necessarily reflect the official views or policy of the Department of Transportation.

This report does not constitute a standard, specification or regulation.

The United States Government does not endorse products or manufacturers. Trade or manufacturers' names appear herein only because they are considered essential to the object of this document.

METRIC CONVERSION FACTORS

Approximate Conversions to Metric Measures

Symbol	When You Know	Multiply by	To Find	Symbol
	LENGTH			
in	inches	*2.5	centimeters	cm
ft	feet	30	centimeters	cm
yd	yards	0.9	meters	m
mi	miles	1.6	kilometers	km
	AREA			
in^2	square inches	6.5	square centimeters	cm^2
ft^2	square feet	0.09	square meters	m^2
yd^2	square yards	0.8	square meters	m^2
mi^2	square miles	2.6	square kilometers	km^2
	acres	0.4	hectares	ha
	MASS (weight)			
oz	ounces	28	grams	g
lb	pounds	0.45	kilograms	kg
	short tons (2000 lb)	0.9	tonnes	t
	VOLUME			
tsp	teaspoons	5	milliliters	ml
Tbsp	tablespoons	15	milliliters	ml
fl oz	fluid ounces	30	milliliters	ml
c	cups	0.24	liters	l
pt	pints	0.47	liters	l
qt	quarts	0.95	liters	l
gal	gallons	3.8	liters	l
ft^3	cubic feet	0.03	cubic meters	m^3
yd^3	cubic yards	0.76	cubic meters	m^3
	TEMPERATURE (exact)			
°F	Fahrenheit temperature	5/9 (after subtracting 32)	Celsius temperature	°C

*1 in = 2.54 (exactly). For other exact conversions and more detailed tables, see NBS Misc. Publ. 286, Units of Weights and Measures, Price $2.25, SD Catalog No. C13.10:286.

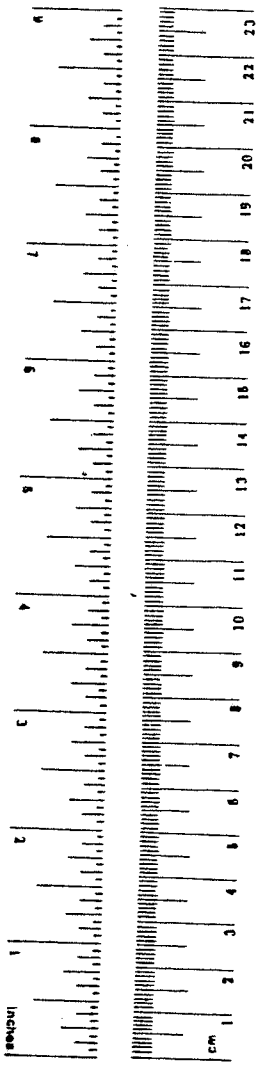

Approximate Conversions from Metric Measures

Symbol	When You Know	Multiply by	To Find	Symbol
	LENGTH			
mm	millimeters	0.04	inches	in
cm	centimeters	0.4	inches	in
m	meters	3.3	feet	ft
m	meters	1.1	yards	yd
km	kilometers	0.6	miles	mi
	AREA			
cm^2	square centimeters	0.16	square inches	in^2
m^2	square meters	1.2	square yards	yd^2
km^2	square kilometers	0.4	square miles	mi^2
ha	hectares (10 000 m^2)	2.5	acres	
	MASS (weight)			
g	grams	0.035	ounces	oz
kg	kilograms	2.2	pounds	lb
t	tonnes (1000 kg)	1.1	short tons	
	VOLUME			
ml	milliliters	0.03	fluid ounces	fl oz
l	liters	2.1	pints	pt
l	liters	1.06	quarts	qt
l	liters	0.26	gallons	gal
m^3	cubic meters	35	cubic feet	ft^3
m^3	cubic meters	1.3	cubic yards	yd^3
	TEMPERATURE (exact)			
°C	Celsius temperature	9/5 (then add 32)	Fahrenheit temperature	°F

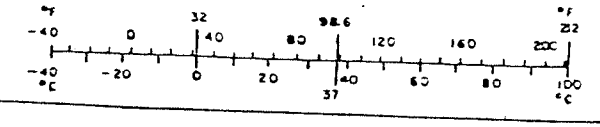

TABLE OF CONTENTS

VOLUME 2 APPENDICES

Appendix	Page
A - ALLOWABLE LOAD STRENGTH ANALYSES OF BRIDGE RAILINGS	
B - ULTIMATE STRENGTH ANALYSES OF BRIDGE RAILINGS	
C - DETAILS OF FULL-SCALE CRASH TESTS	
Test Program	
Selected Railing Designs	
Colorado Type 5 Railing	
Texas T101 Railing	
New Hampshire Two-Bar Aluminum Railing	
North Carolina One-Bar Aluminum Railing	
Indiana Type 5A Railing and Modified Indiana 5A Railing	
Instrumented Wall	
Test Vehicles	
Electronic Instrumentation and Data Processing	
Photographic Instrumentation and Data Processing	
Test Vehicle Propulsion and Guidance	
Anthropomorphic Dummies	

TABLE OF CONTENTS

VOLUME 2 APPENDICES
(continued)

Appendix — Page

Test Results-Colorado Type 5 Railing .....

Summary .....

Test 1 - 2770 lb/56.0 mph/15 deg .....

Test 2 - 4700 lb/63.0 mph/15 deg .....

Test 3 - 4700 lb/61.0 mph/25 deg .....

Test 4 - 19,769 lb/59.0 mph/15 deg .....

Test Results-Texas T101 Railing .....

Summary .....

Test 5 - 2780 lb/57.3 mph/15 deg .....

Test 6 - 4660 lb/60.2 mph/ 15 deg .....

Test 7 - 4630 lb/59.8 mph/25.7 deg .....

Test 8 - 6900 lb/53.4 mph/15 deg .....

Test 9 - 19,940 lb/55.2 mph/15 deg .....

Test 10 - 20,010 lb/52.0 mph/13.2 deg .....

Test 11 - 31,880 lb/58.4 mph/16 deg .....

Test Results-New Hampshire Two-Bar
Aluminum Railing .....

Summary .....

Test 12 - 1950 lb/60.9 mph.15 deg .....

Test 13 - 2780 lb/58.4 mph.15 deg .....

Test 14 - 2780 lb/59.1 mph/20.5 deg .....

Test 15 - 4670 lb/59.2 mph.15 deg .....

TABLE OF CONTENTS

VOLUME 2 APPENDICIES
(Continued)

Appendix		Page
	Test Results-North Carolina One-Bar Aluminum Railing	
	Test 23 - 19,920 lb/57.3 mph.14.7 deg	
	Test Results-Indiana Type 5A Railing	
	Summary	
	Test 24 - 1950 lb/57.5 mph/12.5 deg	
	Test 25 - 2780 lb/53.6 mph/19.5 deg	
	Test 26 - 4670 lb/61.6 mph/25.7 deg	
	Test 27 - 2150 lb/54.8 mph/20 deg	
	Test 28 - 2050 lb/55.4 mph/ 19 deg	
	Test Results-Instrumented Wall	
	Summary	
	Test 29 - 2050 lb/59.0 mph/15.5 deg	
	Test 30 - 2800 lb/58.3 mph/15 deg	
	Test 31 - 2830 lb/56.0 mph/18.5 deg	
	Test 32 - 4680 lb/52.9 mph/15 deg	
	Test 33 - 4700 lb/58.9 mph/25 deg	
	Test 34 - 20,030 lb/57.6 mph/15 deg	
	Test 35 - 32,020 lb/56.9 mph/15.7 deg	
	Test 36 - 4740 lb/59.9 mph/ 24 deg	
	Test 37 - 2090 lb/50.5 mph/21.0 deg	
D - DEVELOPEMENT OF PERFORMANCE STANDARDS		
E - DEVELOPMENT OF DESIGN GUIDELINES		

APPENDIX A

ALLOWABLE LOAD STRENGTH ANALYSES OF BRIDGE RAILINGS

An elastic strength, structural analysis was performed on each of the five railing systems: Colorado Type 5 Rail, Texas T101 Traffic Rail, New Hampshire Two-Bar, North Carolina One-Bar, and Indiana 5A Bridge Rail. The allowable loads were calculated using the elastic analysis procedures specified in the AASHTO bridge specifications for 1975 and 1977. The controlling structural elements were determined and maximum allowable loads were calculated for each element for one, two, and three posts between splices.

These analyses and the results are presented on the following pages.

SUMMARY
ELASTIC ANALYSIS
COLORADO BRIDGE RAIL
Calculated Maximum Allowable Load, P [kips]

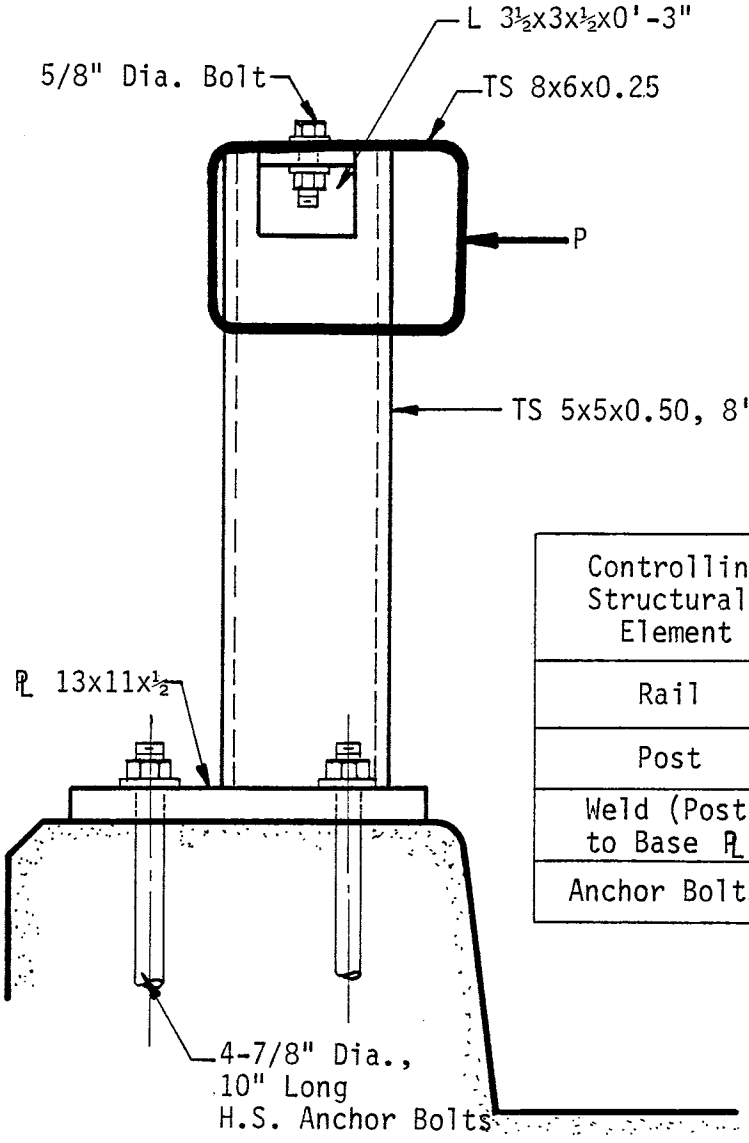

Controlling Structural Element	Number of Posts Between Splices		
	1	2	3
Rail	20.4	20.4	20.4
Post	10.2	10.9	11.2
Weld (Post to Base PL)	12.0	13.1	13.6
Anchor Bolts	7.4	7.8	8.0

ELASTIC ANALYSIS FOR THE COLORADO TYPE 5

RAIL

TS 8 x 6 x ¼

L = 7' - 8½"(center to center posts)

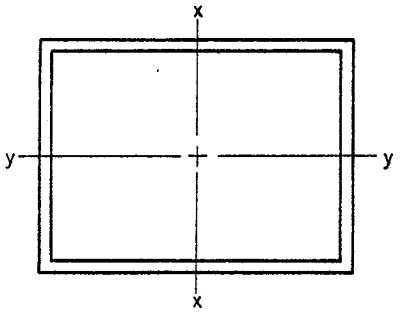

Cross Section at Center Span

From AISC steel manual

$I_x = 58.4\ in^4$

$S_x = 14.6\ in^3$

$r_x = 3.00\ in$

$I_y = 37.6\ in^4$

$S_y = 12.5\ in^3$

$r_y = 2.41\ in$

$F_y = 36\ ksi$

For bending about Y-Axis

$F_b = .60\ (F_y) = 21.6\ ksi$ AASHTO 1.1.8.A3 (1977)

$M = F_b\ S_x = 315.36\ k\text{-}in$

From AASHTO Interim Specifications, Bridges, 1975

Design moment for one Bridge Rail is:

$M = PL/6$

$315.36\ k\text{-}in = \frac{P(92.5")}{6}$

P = 20.4 kips, allowable load at center span for two posts.

POST

TS 5 x 5 x 1/2

$S_x = S_y = 10.3\ in^3$

$F_b = .60\ F_y = 21.6\ ksi$

L = 17.5 in

Transverse load = P

Longitudinal load = $\frac{P}{2\ N}$ N = Number of posts < 4.

$$F_t \leq \frac{LP}{S_x} + \frac{LP}{2\,N\,S_y}$$

$$P = \frac{F_t}{L\left(\frac{1}{S_x} + \frac{1}{2\,N\,S_y}\right)}$$

For N = 4 P = 11.3 kips
For N = 3 P = 10.9 kips
For N = 2 P = 10.2 kips

SHEAR FOR POST

Allowable shear stress = 2/3 allowable tensile stress.
= 2/3 (.60 F_y) = 14.4 ksi

Transverse Shear:

$P = f_v A_{eff}$ $A_{eff} = 5\ in^2$

P = 72 kips > 10 kips required

Longitudinal Shear:

P = 72 kips > 2.5 kips for two posts

WELD POST TO BASE PLATE

From "Design of Welded Structures" by Blodgett, treat welds as lines since all welds are the same size (1/2 in weld).

Area of weld pattern = 28 in

$$y_b = \frac{\Sigma A_y}{A} = 3.8 \text{ in}$$

t = 1 unit

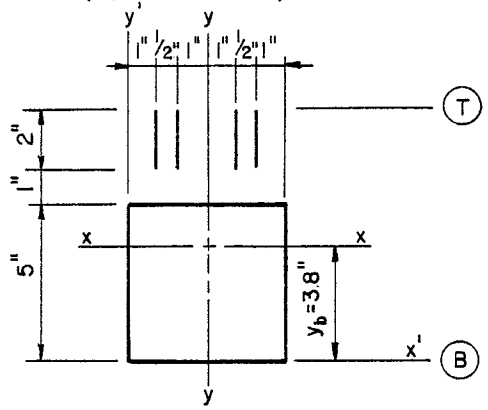

$$I_{x\ post} = \frac{t\,d^2}{6}(3b + d) = 83.3\ in^4$$

$$I_{xBM} = \frac{t\,d^3}{12} = 0.667\ in^4$$

$$I_{xx} = (I_x + A\,d^2)_{post} + (I_x + A\,d^2)_{BM} = 201.7\ in^4$$

$$S_t = \frac{I_{xx}}{y_t} = 48 \text{ in}^3$$

$$S_b = \frac{I_{xx}}{y_b} = 53.1 \text{ in}^3$$

$$S_w = b\ d$$

$$I_{yy} = \frac{b\ d^2}{2} = 96.3 \text{ in}^4$$

$$S_y = \frac{I_{yy}}{y} = 38.5 \text{ in}^3$$

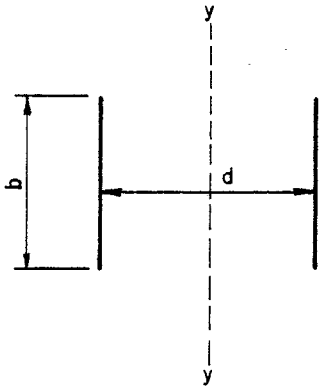

WELD PATTERN

For fillet welds (ASTM 1.7.41B),

F_u = 60 ksf F_v 0.27 F_u = 16.2 ksi

F_{allow} for 1/2 in weld = 0.707 $(F_v)(0.5)$ = 5.73 ksi

Transverse load = P

Longitudinal load = $\frac{P}{2\ N}$

$$F_{allow} \leq \frac{LP}{S_x} + \frac{LP}{2\ N\ S_y} \quad ; \quad P = \frac{F_{allow}}{L\left(\frac{1}{S_x} + \frac{1}{2\ N\ S_y}\right)}$$

L = 17.5 in, F_{allow} = 5.75 ksi For N = 4 P = 13.6 kips

S_x = 48 in^3 (controls) For N = 3 P = 13.1 kips

S_y = 38.5 in^3 For N = 2 P = 12.0 kips

ANCHOR BOLTS TO BASE PLATE

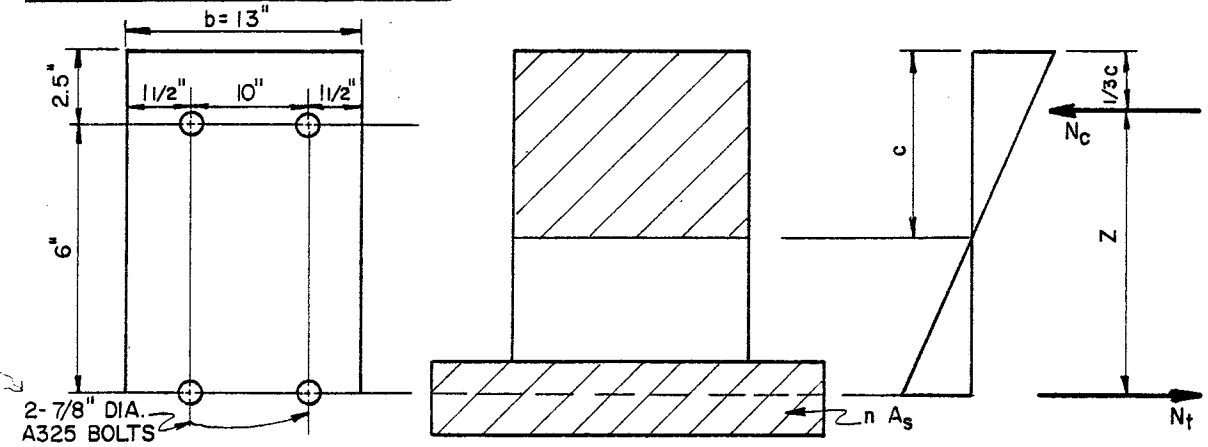

$f'_c = 3.6$ ksi

$f_s = 40$ ksi $A_s = 2\ (.6013) = 1.2026$ in^2

For bearing base plate to concrete,

$f_b = .3\ f'_c = 1.08$ ksi 1977 AASHTO 1.5.26(3)

Transformed area,

$E_c = 57000\sqrt{f'_c} = 3.42 \times 10^6$ See p. 204 Ferguson (3d Ed)

$E_s = 29 \times 10^6$

$n = \frac{E_s}{E_c} = 8.5$

$n\ A_s = 10.20$ in^2

Find centroid of area (at c)

$c = 2.95$ in $c/3 = 0.98$ in

$Z = d - c/3 = 7.52$ in

$N_t = A_s\ f_s = 1.2026\ f_s$

$N_c = 0.5(f_b)b(c) = 19.18\ f_b$

Let $N_c = N_t$

$19.18\ f_b = 1.2026\ f_s$

if $f_s = 40$ ksi $f_b = 2.5$ ksi

if $f_b = 1.08$ ksi $f_s = 17.22$ ksi (controls)

Therefore,

$M = A_s\ f_s\ Z = 155.7$ k-in

$L = 18$ in

$P = M/L = 8.65$ kips

ANCHOR BOLTS TO BASE PLATE

Longitudinal forces:

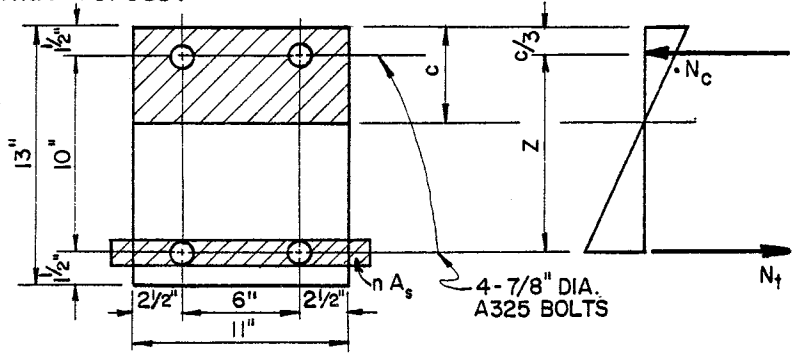

$f'_c = 3.6$ ksi $f_b = 0.3\, f'_c = 1.08$ ksi

$f_s = 40$ ksi $A_s = 1.2026$ in^2 1977 AASHTO 1.5.26(3)

Transformed area,

$$n = \frac{E_s}{E_c} = \frac{29 \times 10^6}{57000\ f'_c} = 8.48, \text{ say } 8.5$$

$n\, A_s = 10.20$ in^2

Define Bending Section,

Center of area c = 3.78 in c/3 = 1.26 in and Z = 10.24 in

$N_t = A_s\, f_s = 1.2026\, f_s$

$N_c = 0.5\, f_b\, b\, c = 20.79\, f_b$

By forcing,

$N_t = N_c$

$1.2026\, f_s = 20.79\, f_b$

if $f_s = 40$ ksi $f_b = 2.30$ ksi > 1.08 (NG)

if $f_b = 1.08$ ksi $f_s = 18.67$ ksi (controls)

So for combined stresses:

$$M=18P = (7.52)(0.5)(13)(2.95)\, f_{bt}$$

$$\frac{18\ P}{2N} = (10.24)(0.5)(11)(3.78)\, f_{bc}$$

$f_{bt} = 0.1248\ P$

$f_{bc} = \frac{0.0423\ P}{N}$

$f_{bt} + f_{bc} < 1.08$

For: N = 2 P = 7.4

N = 3 P = 7.8

N = 4 P = 8.0

ANCHOR BOLT ASSEMBLY CONNECTION

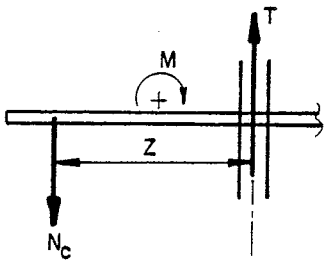

M = P (18 in)

M = TZ

$T_{(kips)} = t\, A_{(ksi)}$

P (18 in) = t A Z

A = 1.2 in^2 Z = 7.49 in^4

Therefore the tensile bolt unit stress, $t = 2.0\ P$; shear stress, $s = \frac{P}{A}$

where $A = 2.4\ in^2$; $k = 0.555$ for A325 bolts AASHTO 1977 1.7.41(c),

allow combined stress:

$S^2 = s^2 + (kt)^2$

$S = 1.18\ P$

Allowable bolt unit stress in shear (S)

$S = 20{,}000$ by AASHTO 1977 Table 1.7.41(c)

$P = 16.95^k$

SUMMARY
ELASTIC ANALYSIS
TEXAS T101 TRAFFIC RAIL
Calculated Maximum Allowable Load, P [kips]

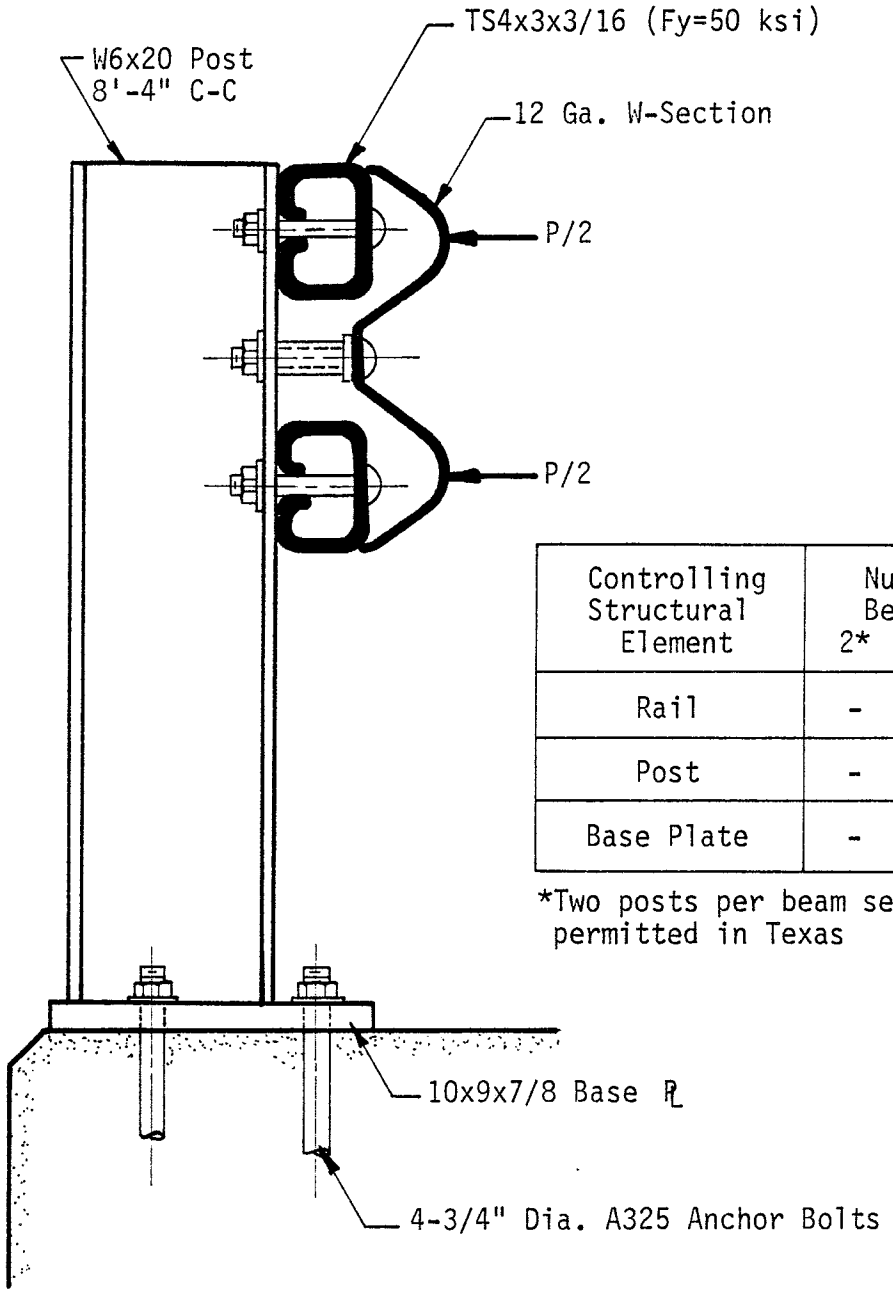

Controlling Structural Element	Number of Posts Between Splices		
	2*	3	4
Rail	-	10.5	14.0
Post	-	9.6	10.2
Base Plate	-	4.2	4.4

*Two posts per beam section is not permitted in Texas

ELASTIC ANALYSIS FOR TEXAS TYPE T101

RAIL

For Flex-Beam shape, 12 ga W-beam

$$M_{all_{BM}} = F_b S$$
$$= 0.6\ (50{,}000\ psi)(1.37)$$
$$= 41{,}100\ in\text{-}lb$$

For one Rectangular tube, TS 4 x 3 x 3/16

$$M_{all_T} = F_b S$$
$$= 0.6\ (50{,}000)(2.23)$$
$$= 66900\ in\text{-}lb$$

Assuming that the deflection of each element is the same at first yield (a reasonably valid assumption)

$$\frac{P_{all} L}{6} = M_{all_{BM}} + 2\ M_{all_T}$$

Where L = 25/n

So for,

n = 4 $\qquad P_{all} = 13.99$ kips

n = 3 $\qquad P_{all} = 10.49$ kips

n = 2 $\qquad P_{all} = 7.00$ kips

POST

A36 Steel W6 x 20

$I_{xx} = 41.5\ in^4$

$S_{xx} = 13.4\ in^3$

$I_{yy} = 13.3\ in^4$

$S_{yy} = 4.43\ in^3$

$$\frac{20.125\ P}{13.4} + \frac{20.125\ P}{2n \times 4.43} = 0.6 \times 36\ ksi$$

So for,

n = 3 $\qquad P_{all} = 9.57$ kips

n = 4 $\qquad P_{all} = 10.18$ kips

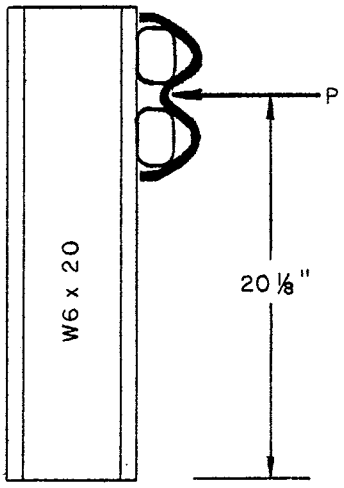

Define NA--weak direction

$10c\ (c/2) = 7.51\ (7.5 - c)$

$c = 2.688$ in $c/3 = 0.896$ $Z = 6.604$

$N_c = 13.44\ f_b$

$f_s = 16.4$

Combining,

$M = 21\ P = 13.36\ f_{b_T}(7.26)$

with

$21\ (P/2n) = 13.44\ f_{b_L}(6.604)$

$f_{b_T} + f_{b_L} = 1.08$

$$P_{all} = \frac{1.08}{0.2165 + 0.1183/n}$$

So for,

$n = 4$ $P_{all} = 4.39$ kips

$n = 3$ $P_{all} = 4.22$ kips

$n = 2$ $P_{all} = 3.92$ kips

$N_c = 0.85\ f'_c\ b\ a = 23.4\ c$

$N_t = 2\ (17.67) + 2\ (0.3345)\ f_2$

Let $N_t = N_c$

$c = 1.51 + 0.02859\ f_2$

To find f_2 set up

$$\frac{c}{0.003} = \frac{3.25}{\epsilon_2 + 0.003}$$

$\epsilon_2 = f_2/29 \times 10^3$

$f_2 = 31$ ksi

$c = 2.4$ in

$N_c = 23.4$ kips

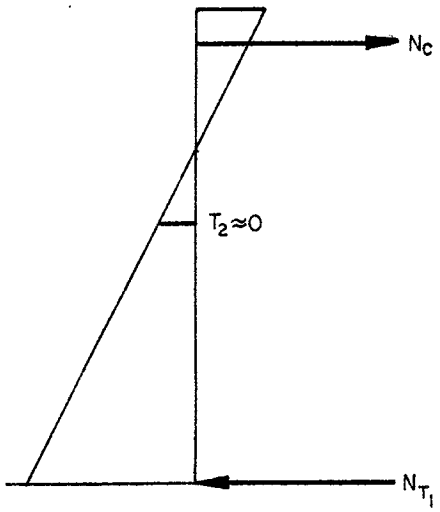

For 3/4 ϕ A325 Bolts

$P_{all} = 17.65$ kip/bolt

σ (clamping stress) $= \dfrac{4\ P_{all}}{A} = 0.784$ ksi

$$\sigma = \frac{21\ P_{all}\ y}{I_{xx}} + \frac{21\ P_{all}\ x}{I_{yy}\ 2n}$$

BASE PLATE

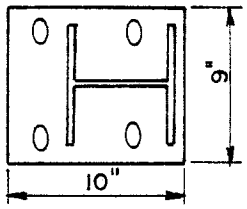

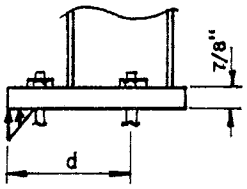

4-3/4 in ϕ A325 Bolts

For design P_t = 17.67 kips

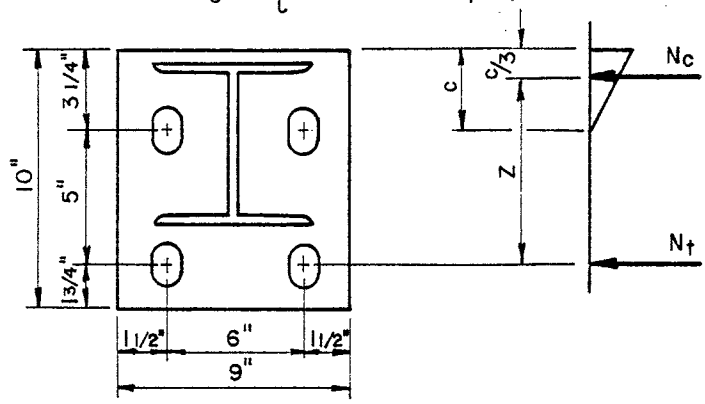

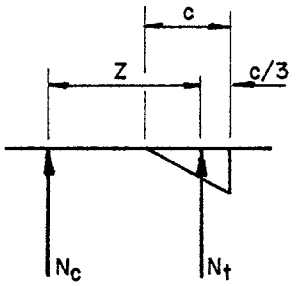

Note: Use 4-3/4 in ϕ Bolts

Use f'_c = 3.6 ksi

$f_b = 0.3\ f'_c$ = 1.08 ksi

$$n = E_s/E_c = \frac{29 \times 10^6}{57000\sqrt{f'_c}} = 8.5$$

$n\ A_s$ = 7.51 in^2

Define NA--strong direction

$9c(c/2) = 7.51\ (8.25 - c)$

c_s = 2.969 in c/3 = 0.99 Z = 7.26

$N_t = 0.8836\ f_s$

$N_c = 0.5\ f_b\ b\ c$

$= 13.36\ f_s$

$N_t = N_c$

f_s = 16.3

So for,

n = 2 P_{all} = 4.38 kips

n = 3 P_{all} = 4.725 kips

n = 4 P_{all} = 4.92 kips

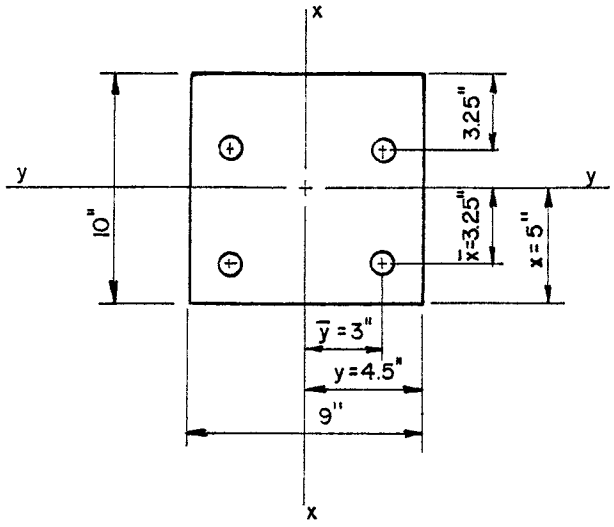

The previous calculations were for relief of prestress pressure at the edge of the plate.

How about at the bolt.

$$\sigma = \frac{21\ P_{all}\ \bar{y}}{I_{xx}} + \frac{21\ P_{all}\ \bar{x}}{I_{yy}\ 2n}$$

So for,

n = 4 P_{all} = 7.54 kips

n = 3 P_{all} = 7.24 kips

n = 2 P_{all} = 6.71 kips

SUMMARY
ELASTIC ANALYSIS
NEW HAMPSHIRE BRIDGE RAIL
Calculated Maximum Allowable Load, P [kips]

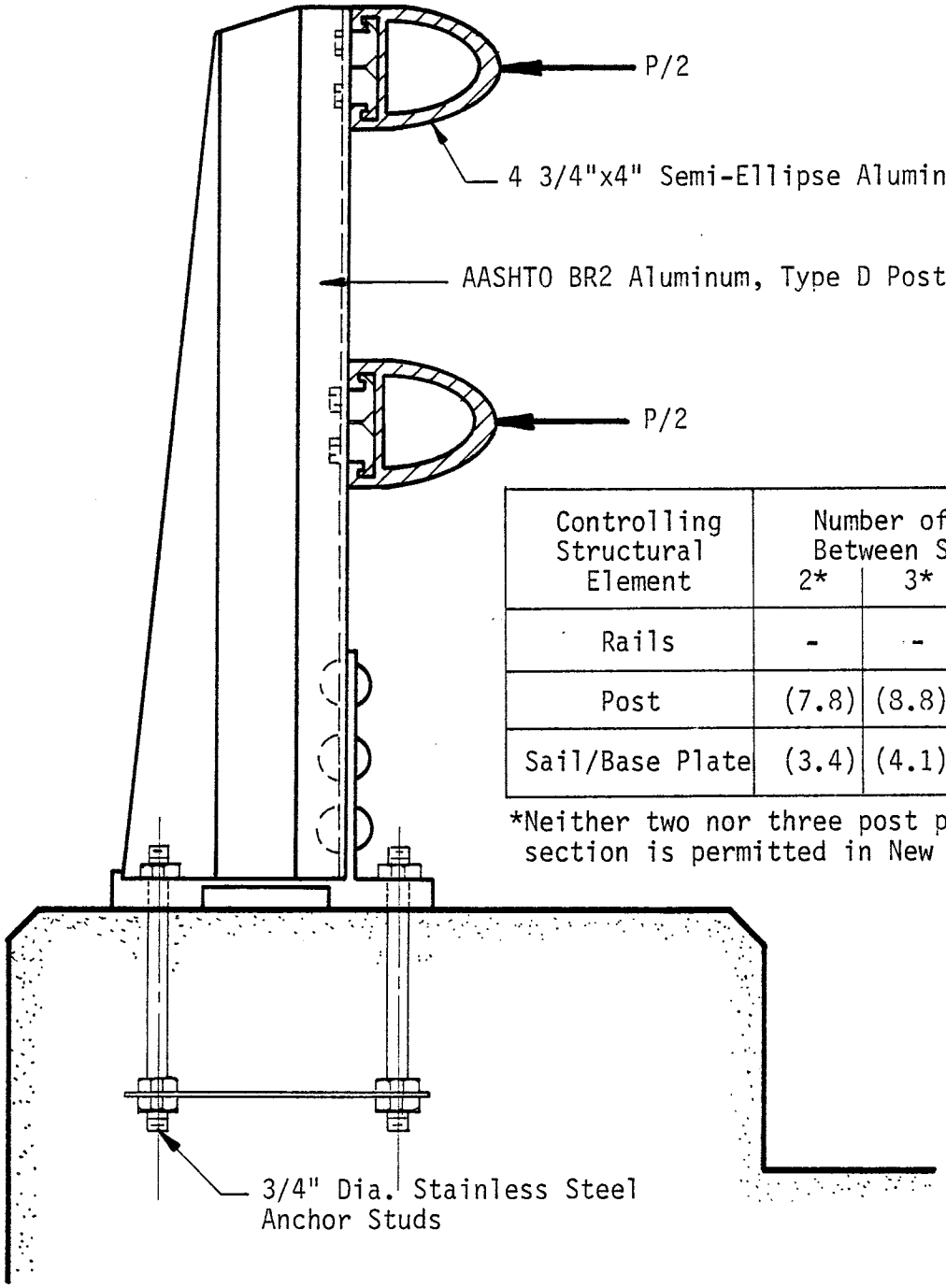

Controlling Structural Element	Number of Posts Between Splices 2*	3*	4
Rails	-	-	16.4
Post	(7.8)	(8.8)	9.5
Sail/Base Plate	(3.4)	(4.1)	4.5

*Neither two nor three post per beam section is permitted in New Hampshire

ELASTIC ANALYSIS FOR NEW HAMSHIRE 2-BAR RAIL

RAIL

4 3/4" x 4" Semi-Ellipse 6061-T6

A=3.63 in

I_{yy}=6.724 in

S_{yy}=3.362 in

I_{xx}=9.093 in

Y_{min}=2.341 in

Y_{max}=2.409 in

Span=8'-0"

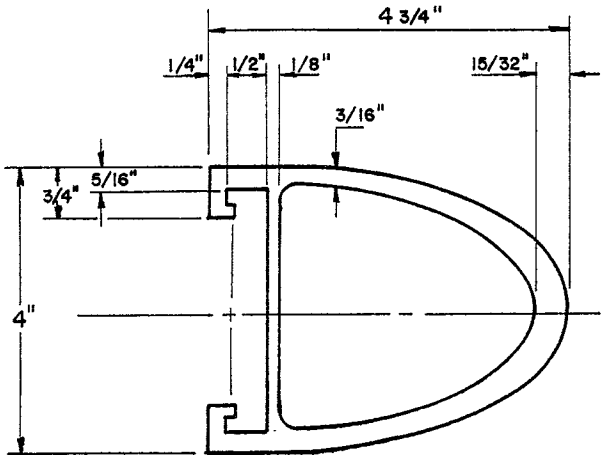

Positive moment at midspan

Tension: F_{bt}=17

$$P_{all}=\frac{6F_{bt}\ n\ S_{xx}\ t}{L}=8.23 \text{ Kips}$$

Compression: F_{bc}=23

P_{all}=8.23 Kips

Negative moment at post

Tension (front face): F_{bt}=21

P_{all}=9.91 Kips

Compression: F_{bc}=19

P_{all}=9.19 Kips

POST

BR2 (aluminum) Type D Fabricated Post

Allowable transverse force on post is

$$F_t \leq \frac{15.5P}{S_{xx}} + \frac{15.5P/2n}{S_{yy}}$$

F_t=17 ksi

$$P_{all}=\frac{F_t}{15.5\left[\frac{1}{S_{xx}}+\frac{1}{2AS_{yy}}\right]}$$

where n is the number of posts in a continuous rail length, not to exceed four.

So far

n=2 P_{all}=8.12

n=3 P_{all}=9.43

n=4 P_{all}=10.26

In compression F_c=19 ksi

So far

n=2 P_{all}=7.78

n=3 P_{all}=8.83

n=4 P_{all}=9.47

Assume post is critical at top of sail, the section moduli about x-x are:

S_{max}=12.692 in

S_{min}=9.875 in

the section moduli about y-y is:

S_{yy}=4.439

the bending arm is:

e=15.5 in

SAIL ANALYSIS

Section properties on the plane where the post sets on the sail plate are:

I_{xx} = 70.76 in^4

S_{xx} = 23.785 in^3 (tension side)

I_{yy} = 39.124 in^4

S_{yy} = 7.279 in^3

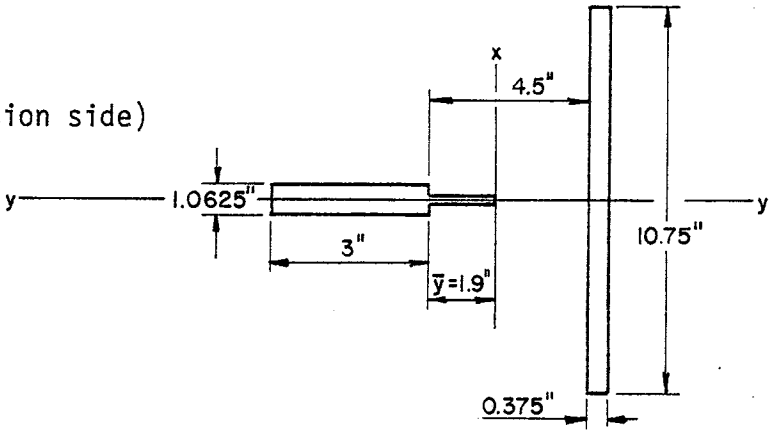

Determine $\bar{y}$ so that the areas in comression and tension are equal.

$\bar{y}$ = 1.9 in

Calculate the axial tension load in the "sail" (the portion of the extruded base plate that protrudes into the air and rivets to the tension flange of the post).

Let F = force in the sail

$F = f_t A = 3.56\ P$ (transverse only)

Or,

$$F_t = 21.125\ P \left(\frac{1}{S_{xx}} + \frac{1}{2\ n\ S_{yy}} \right)$$

$F_t = 17$ ksi

So far,

n = 2	P = 10.56
n = 3	P = 12.42
n = 4	P = 13.64

Note: This is for axial load only in the sail--no bending, no stress concentration.

Investigate the effects of bending--to do this assume loading geometry shown. The running load Q is:

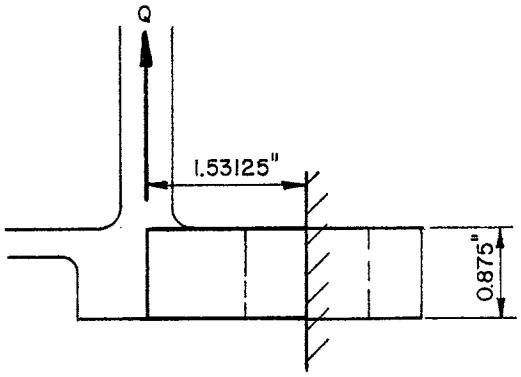

$$Q = 21.125\ P \left[\frac{1}{23.91} + \frac{1}{7.2789 \times 2n} \right] \times 0.375 \text{ in}$$

n = 2	Q = 0.6034 P
n = 3	Q = 0.5127 P
n = 4	Q = 0.4674 P

$$\sigma = \frac{Q\ (1.53125)(6)}{(0.875)^2} = 12\ Q$$

In tension $F_b = 25000$

$(25000) = 12 \times 0.6034\ P_{all}$

n = 2	P_{all} = 3450 lb
n = 3	P_{all} = 4063 lb
n = 4	P_{all} = 4457 lb

SUMMARY
ELASTIC ANALYSIS
NORTH CAROLINA BRIDGE RAIL
Calculated Maximum Allowable Load, P [kips]

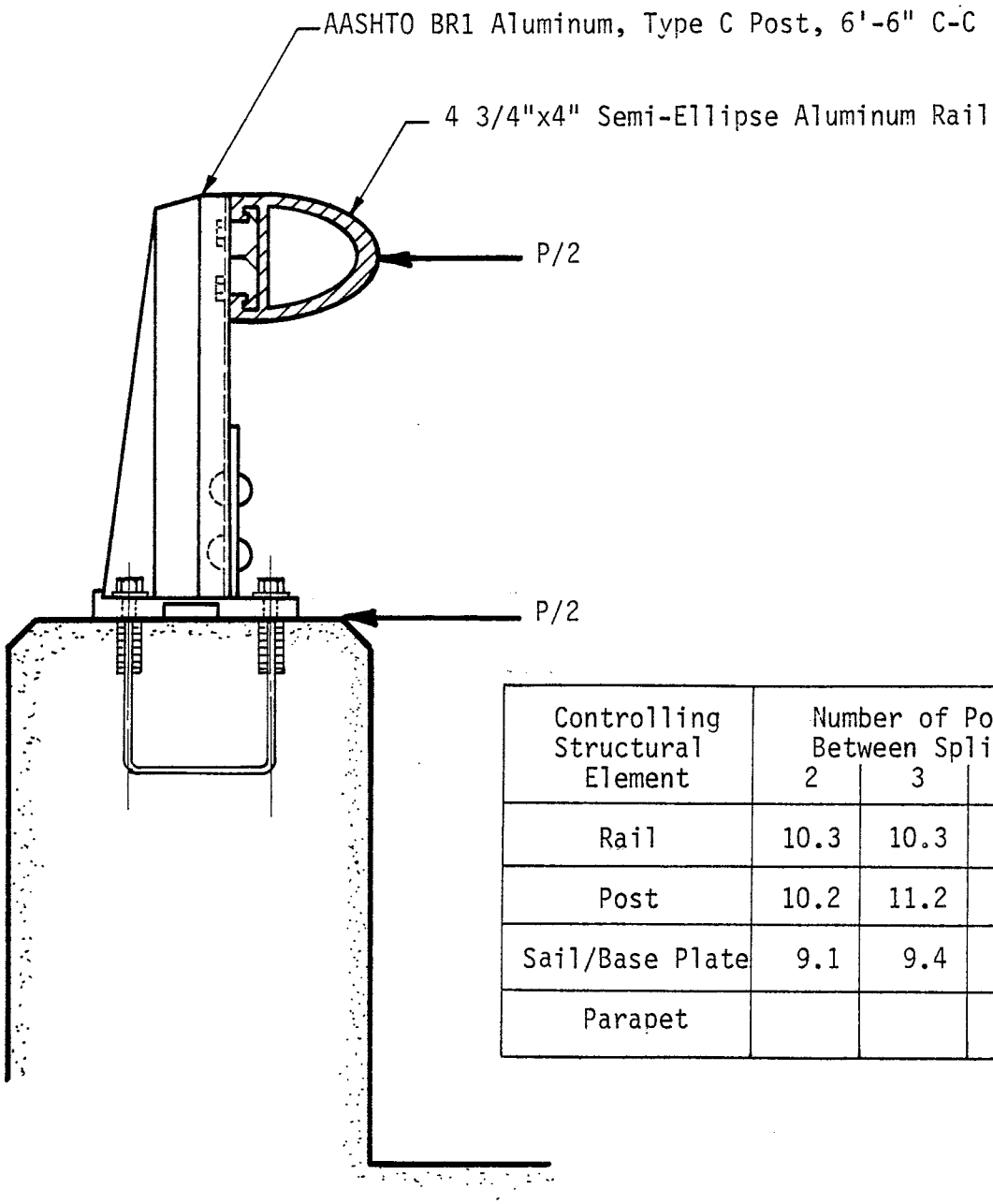

Controlling Structural Element	Number of Posts Between Splices 2	3	4
Rail	10.3	10.3	10.3
Post	10.2	11.2	11.8
Sail/Base Plate	9.1	9.4	9.5
Parapet			

ELASTIC ANALYSIS FOR NORTH CAROLINA 1-BAR

RAIL

4 3/4 x 4 Semi-Ellipse Aluminum Rail

L = 6'- 6"

From ARBA TB 168-B p. 198

I_{xx} = 9.178 in^4

C_c = 2.41 in (front face)

C_t = 2.34 in (rear face)

S_{xx_c} = 3.809 in^3

S_{xx_t} = 3.921 in^3

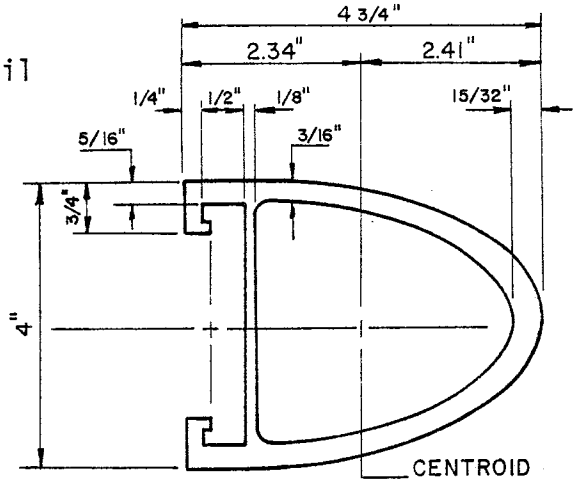

AASHTO Interim Specification, Bridges, 1977. Specifies the design moment for bridge rails:

$M = \frac{PL}{6(2)}$ (One rail or concrete wall)

For positive moment at midspan:

Tension,

F_{bt} = 17 ksi for 6061-T6

$P_{all} = \frac{12\ F_{bt}\ S_{xx_t}}{L}$ = 10.25 k

Compression,

F_{bc} = 22 ksi

P_{all} = 12.89 k

For negative moment at post:

Tension (front face),

F_{bt} = 21 ksi

P_{all} = 12.31 k

Compression (rear face),

F_{bc} = 19 ksi

P_{all} = 11.46 k

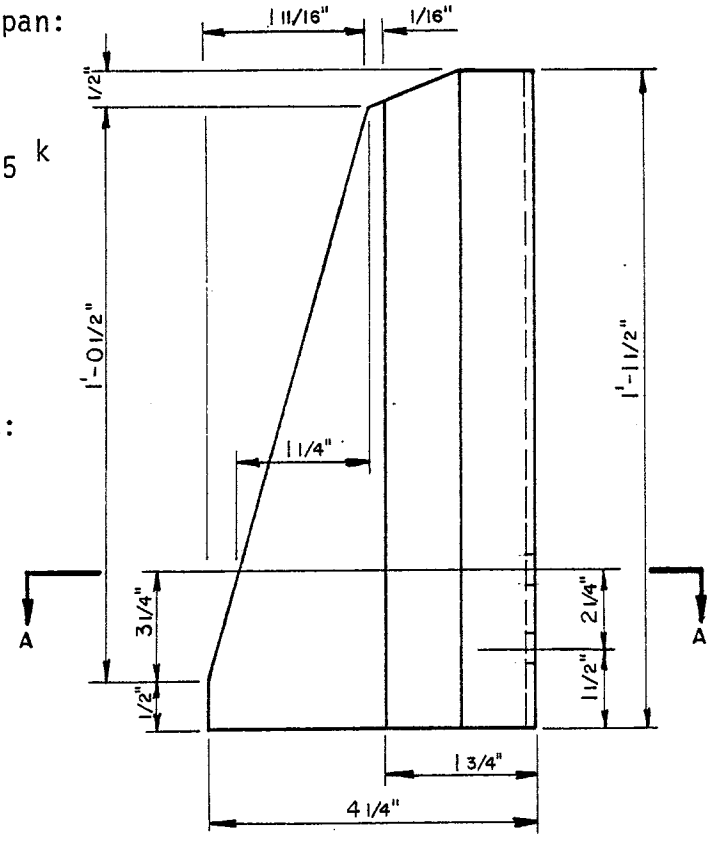

POST

Determine properties of post cross section at top row of rivets.

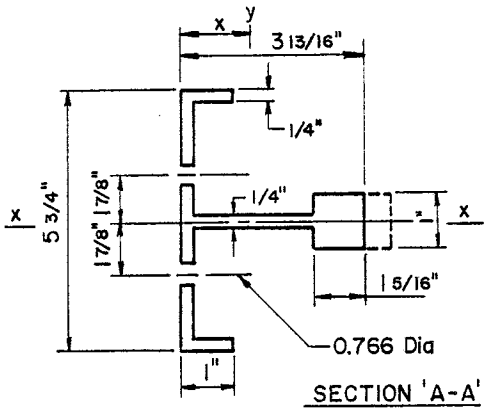

$y = 2.87$ in

$x = 1.6$ in

$I_{yy} = 6.31$ in^4

$I_{xx} = 5.55$ in^4

Calculate section modulas

$$S_{xx} = \frac{I_{xx}}{y} = 1.93 \text{ in}^3$$

$$S_{yy} = \frac{I_{yy}}{x} = 3.94 \text{ in}^3 \text{ to front face}$$

$$S_{yy} = \frac{I_{yy}}{5.75 - x} = 2.85 \text{ in}^3 \text{ to rear face}$$

Calculate the allowable transverse load P as controlled by the post section of the top row of rivets:

e = 7.75" (moment arm)

Allowable stress

Bending: tension, F_t = 17 ksi

compression, F_c = 19 ksi about strong axis

See Table 3.3.9,

Specs. for Aluminum Bridge and Other Highway Structures. The Aluminum Association, April 1976.

On tension side:

$$F_t \leq \frac{e\ P/2}{S_{yy_{max}}} + \frac{e\ P/4n}{S_{xx}}$$ (n = number of posts in a continuous rail length)

For $P = P_{all}/2$ and

n = 4 $\quad P_{all}/2 = 6.885^{k}$, $P_{all} = 13.77^{k}$

n = 3 $\quad P_{all}/2 = 6.448^{k}$, $P_{all} = 12.90^{k}$

n = 2 $\quad P_{all}/2 = 5.772^{k}$, $P_{all} = 11.44^{k}$

In compression:

$$F_c \leq \frac{e\ P/2}{S_{yy_{min}}} + \frac{e\ P/4n}{S_{xx}}$$

For $P = P_{all}/2$ and

n = 4	$P_{all}/2 = 5.90^{k}$,	$P_{all} = 11.80^{k}$
n = 3	$P_{all}/2 = 5.61^{k}$,	$P_{all} = 11.21^{k}$
n = 2	$P_{all}/2 = 5.10^{k}$,	$P_{all} = 10.20^{k}$

SAIL

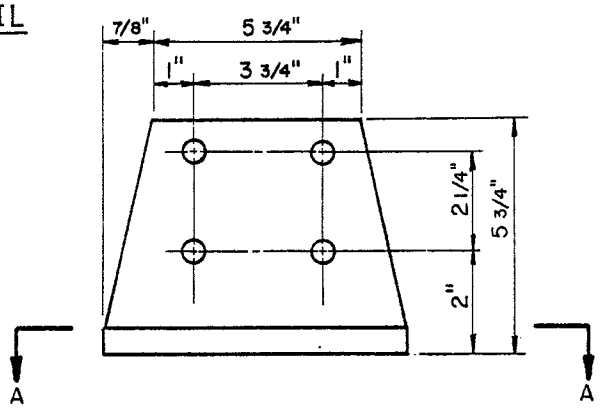

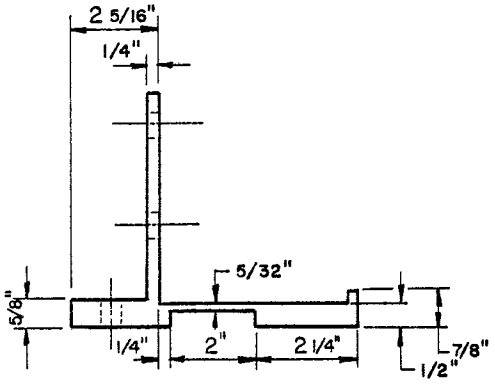

Examine sail at section A-A

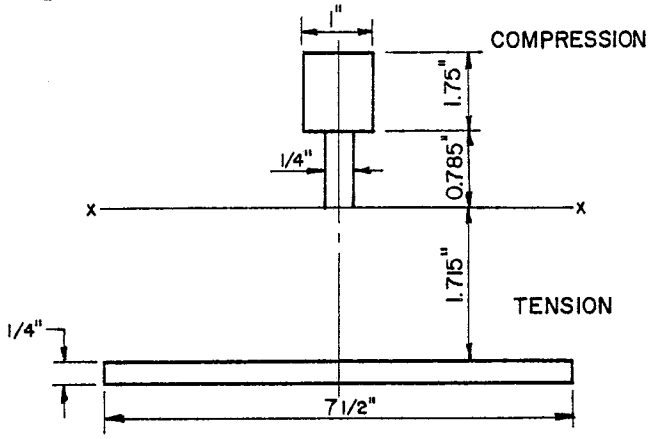

Determine $\bar{y}$ such that the tensile forces equal the compression forces:

$y = 2.54$ in

$x = 3.75$ in

$I_{xx} = 11.67\ in^4$

$I_{yy} = 8.94\ in^4$

$S_{xx_t} = 5.94\ in^3$

$S_{xx_c} = 5.11\ in^3$

$S_{yy} = 2.38\ in^3$

$e = 11.5$ in

Tension side of sail:

$$F_t = \frac{eP}{S_{xx_t}} + \frac{e\ P/2n}{S_{yy}}$$

for $P = P_{all}/2$ and,

n = 4	$P_{all}/2 = 6.69^{k}$,	$P_{all} = 13.38^{k}$
n = 3	$P_{all}/2 = 6.20^{k}$,	$P_{all} = 12.40^{k}$
n = 2	$P_{all}/2 = 5.41^{k}$,	$P_{all} = 10.82^{k}$

Compression side:

$$F_c = \frac{eP}{S_{xx_c}} + \frac{e\ P/2n}{S_{yy}}$$

for $P = P_{all}/2$ and,

n = 4	$P_{all}/2 = 6.65^{k}$,	$P_{all} = 13.30^{k}$
n = 3	$P_{all}/2 = 6.21^{k}$,	$P_{all} = 12.42^{k}$
n = 2	$P_{all}/2 = 5.41^{k}$,	$P_{all} = 10.82^{k}$

Analysis of sail base plate assuming bending of sail and toe of base plate as shown.

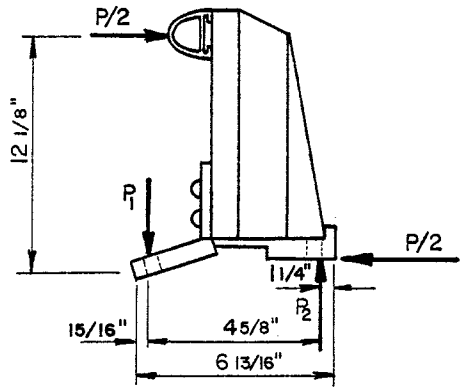

$\Sigma M_{p_2} = 0 = P/2\ (12\ 1/8) + P_1\ (4\ 5/8)$

$P_1 = 1.31\ P$

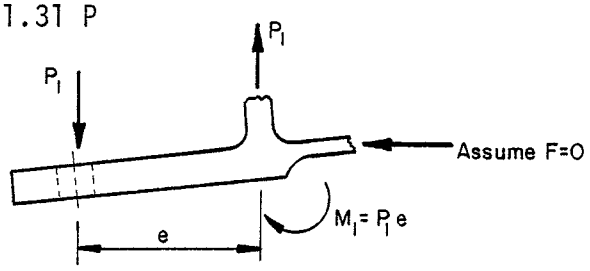

Side View

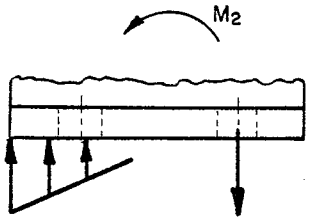

Front View

e = 1.375 in

$M_1 = P_1$ e = 1.31 P (1.375) = 1.80 P

M_2 = 1/2n[P/2 (12.125)] = 3.031 P/n

Where n is the number of posts in continuous length of rail, $n \leq 4$.

Compute area and section moduli for sail;

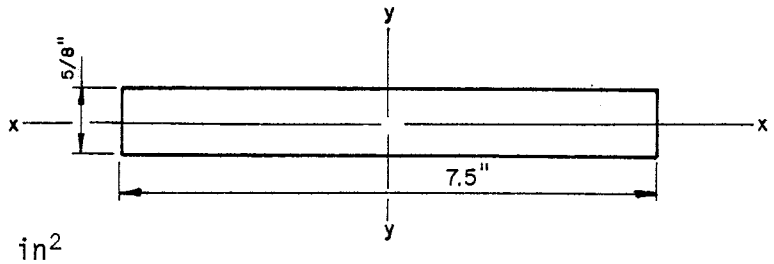

A = 4.6875 in^2

I_{xx} = 0.1526 in^4

S_{xx} = 0.4883 in^3

I_{yy} = 21.9727 in^4

S_{yy} = 5.8594 in^3

F_{all} = 25 ksi (component under bending in own plane) compression

$$f = \frac{P_1}{A} \pm \frac{M_1}{S_{xx}} \pm \frac{M_1}{S_{yy}}$$

For most severe case of tension:

$$f_t = \frac{1.31\ P}{A} + \frac{1.08\ P}{S_{xx}} + \frac{3.125\ P/n}{S_{yy}}$$

F_{all} = 25 ksi

So far,

n = 4	P_{all} = 9.535	k
n = 3	P_{all} = 9.381	k
n = 2	P_{all} = 9.087	k

CONCRETE PARAPET

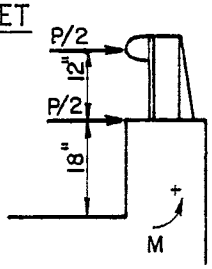

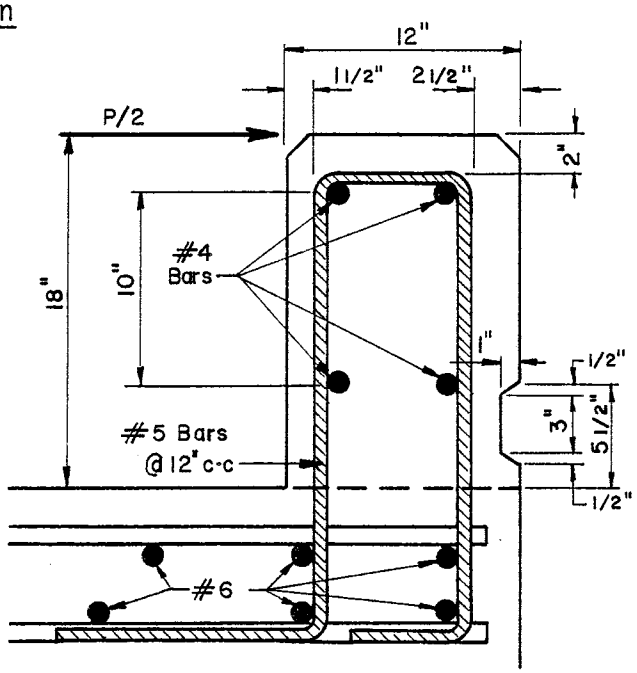

$M = (P/2)(18) + (P/2)(30) = 24\ P$

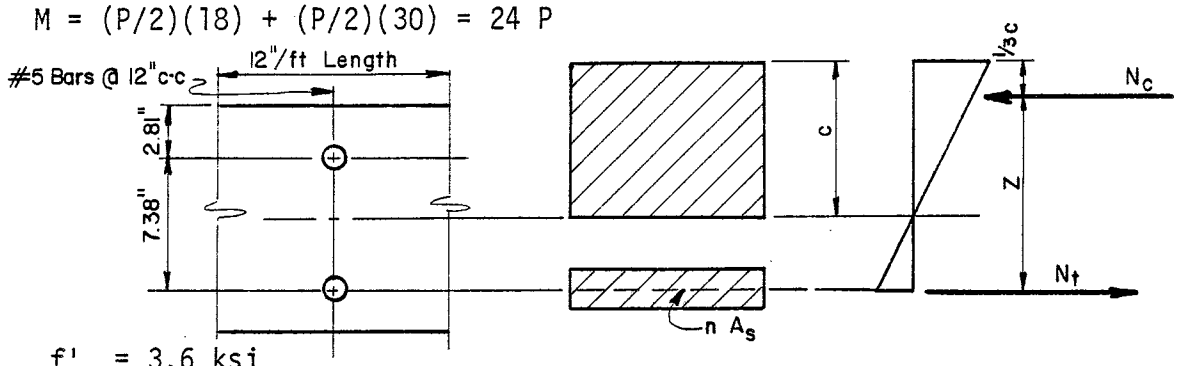

$f'_c = 3.6$ ksi

$f_s = 36$ ksi $\qquad A_s = (0.31)$ in^2

Transformed area:

$E_c = 57000\sqrt{f'_c} = 3.42 \times 10^6$

$E_s = 29 \times 10^6$

$n = E_s/E_c = 8.5$

$n\ A_s = 2.63$ in^3

Find centroid of area at C

$6\ c^2 = n\ A_s\ (10.19 - c)$

$c = 1.9$ in

$c/3 = 0.635$ in

$Z = d - c/3 = 9.555$ in

$N_t = A_s\ f_s$

$N_c = 0.5\ f'_c\ b\ c = 3.81\ f'_c$

Let $N_t = N_c$

$3.81\ f'_c = 0.31\ f_s$

if: $f_s = 36$ ksi $\qquad f'_c = 2.93$ ksi (controls)

$f'_c = 3.6$ ksi $\qquad f_s = 44.25$ ksi

Therefore,

$M = A_s\ f_s\ Z = 106.6$ k-in

$M = 24\ P$

$P = 4.44$ k/ft

SUMMARY
ELASTIC ANALYSIS
INDIANA 5A BRIDGE RAIL
Calculated Maximum Allowable Load, P [kips]

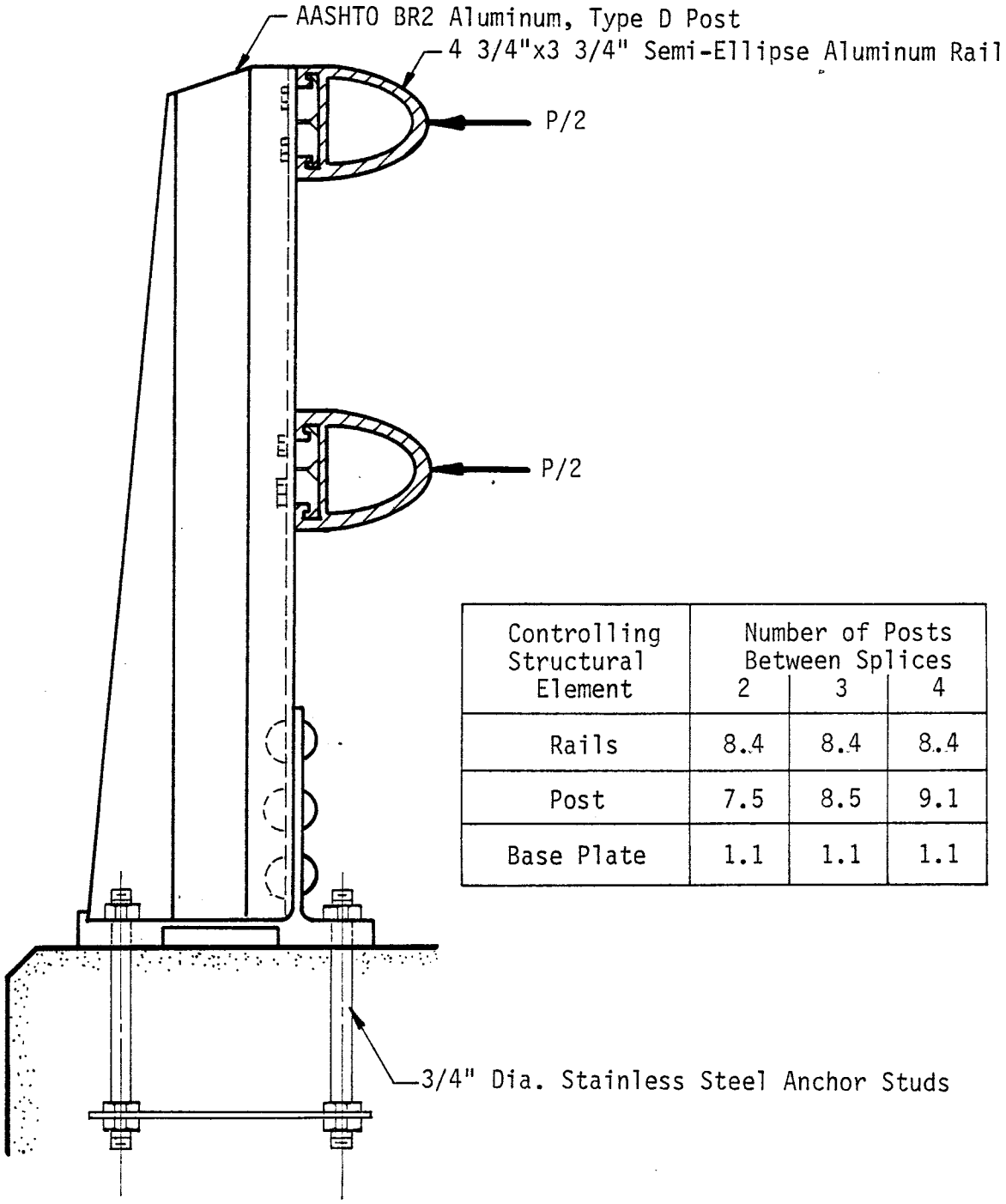

Controlling Structural Element	Number of Posts Between Splices		
	2	3	4
Rails	8.4	8.4	8.4
Post	7.5	8.5	9.1
Base Plate	1.1	1.1	1.1

ELASTIC ANALYSIS FOR INDIANA 5A

RAIL

4 3/4 x 3 3/4 Semi-Ellipse Rail

L = 6'- 6"

From ARBA TB 268-A (p. 145)

$I_{xx} = 7.5 \text{ in}^4$

$x_t = 2.33 \text{ in}$

$x_c = 2.42 \text{ in}$

$$S_{xx_c} = \frac{I_{xx}}{x_c} = 3.1 \text{ in}^3 \text{ (front face)}$$

$$S_{xx_t} = \frac{I_{xx}}{x_t} = 3.22 \text{ in}^3 \text{ (rear face)}$$

For two or more (n) rails M = PL/6n

For positive moment at mid-span:

For tension,

F_{bt} = 17 ksi for 6061-T6 so,

$$P_{all} = \frac{6 F_{bt} n S_{xx_t}}{L} = 8.43 \text{ kips}$$

For compression,

F_{bc} = 22 ksi

P_{all} = 10.49 kips

For negative moment at post:

For tension (front face),

F_{bt} = 21 ksi

P_{all} = 10.00 kips

For compression (rear face),

F_{bc} = 19 ksi

P_{all} = 9.42 kips

POST

AASHTO BR2 Aluminum, Type D

AASHTO BR2 Aluminum, Type D

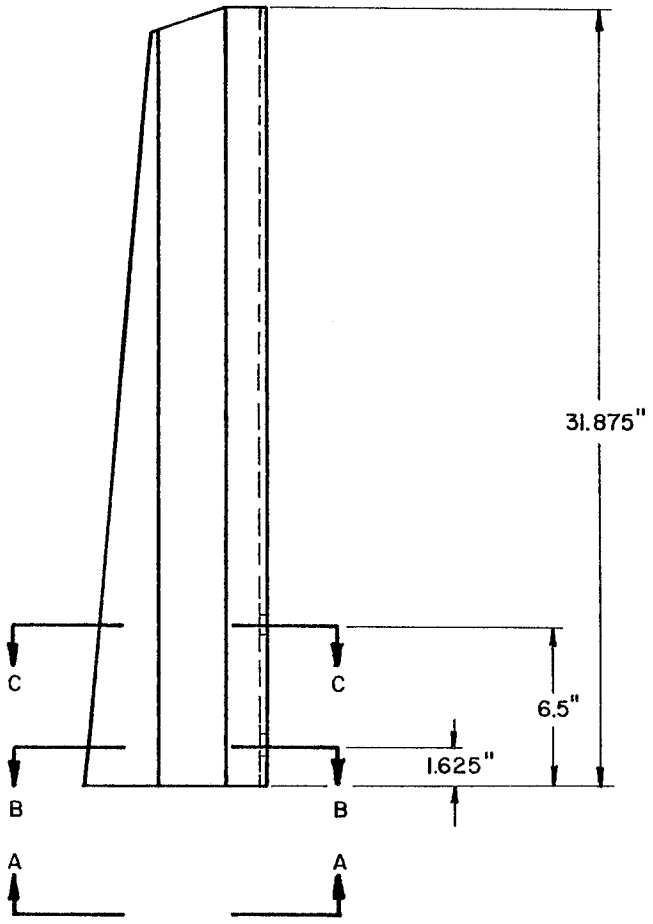

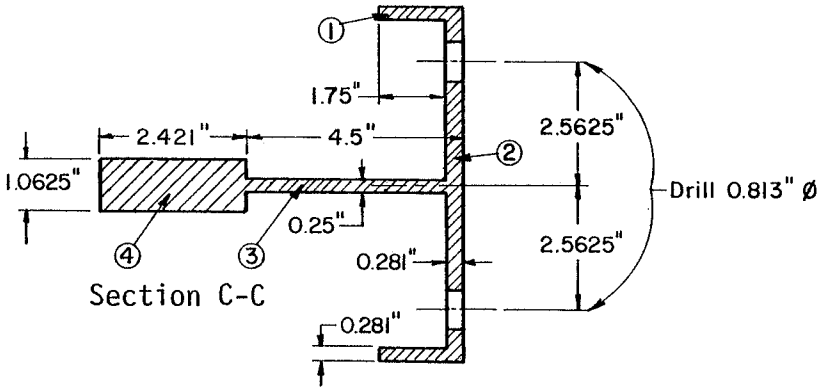

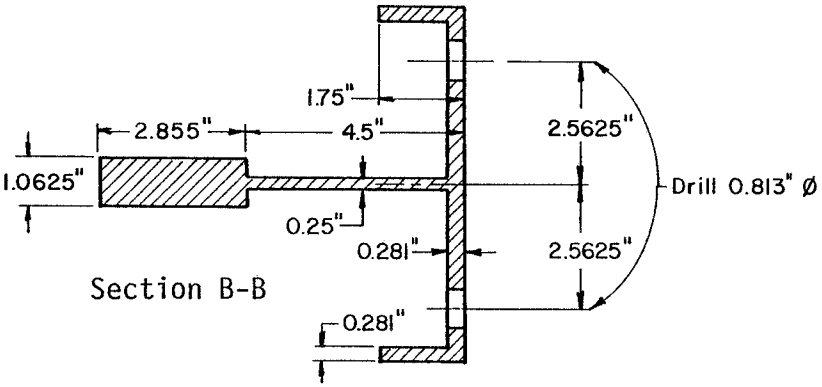

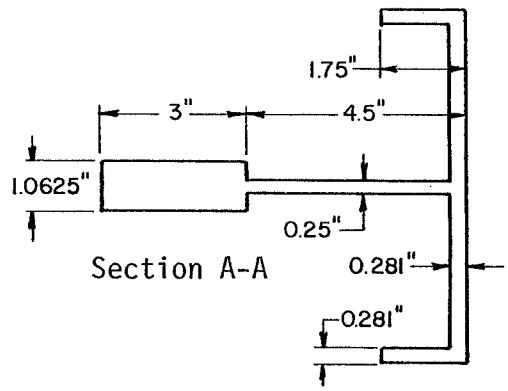

A-21

Section A-A:

$y = 3.204$ in $x = 3.625$ in

$I_{xx} = 52.324$ in^4

$I_{yy} = 19.273$ in^4

$A = 5.514$ in^2

$S_y = 36.278$ in^3

$S_{x_B} = 12.296$ in^3

$S_{x_F} = 16.487$ in^3

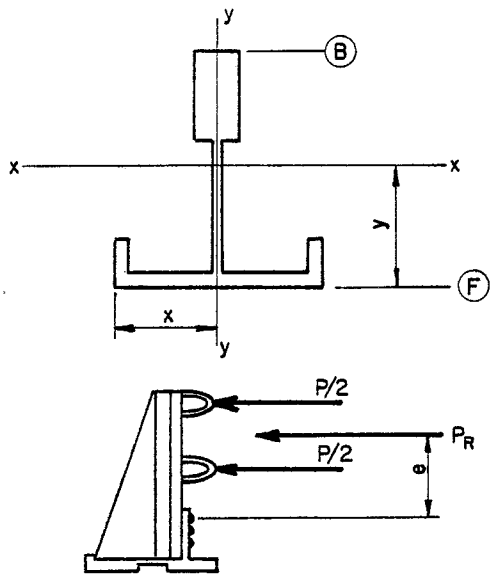

Section C-C:

$y = 3.029$ in $x = 3.625$ in

$I_{xx} = 38.44$ in^4

$S_{max} = 12.692$ in^3

$S_{min} = 9.875$ in^3

$I_{yy} = 16.09$ in^4

$S_{yy} = 4.439$ in^3

Calculate the allowable transverse load P as controlled by the post section at the top row of rivets (Section C-C)

Moment arm, e = 16.31 in

Allowable stress,

bending: tension $F_t = 17$ ksi

compression $F_c = 19$ ksi strong axis

See Table 3.3.9 Specs. for Aluminum Bridge and Other Highway Structures, The Aluminum Association, April 1976.

On the tension side,

noting that; $$F_t \leq \frac{16.3125\ P}{S_{xx_{max}}} + \frac{16.3125\ P/2n}{S_{yy}}$$

one can solve for the allowable transverse force P_{all} thusly:

$$P_{all} = \frac{17 \text{ ksi}}{16.3125 \left[\frac{1}{12.692} + \frac{1}{4.439 \times 2n}\right]}$$

where n is the number of posts in a continuous rail length, not to exceed 4.

So for,

n = 4 P_{all} = 9.74 kips

n = 3 P_{all} = 8.96 kips

n = 2 P_{all} = 7.71 kips

In compression,

$$F_c \leq \frac{16.3125\ P}{S_{xx_{min}}} + \frac{16.3125\ P/2n}{S_{yy}}$$

So for,

n = 4 P_{all} = 9.00 kips

n = 3 P_{all} = 8.39 kips

n = 2 P_{all} = 7.39 kips

Note: No account was taken of the stress concentration. If it had been considered the P_{all}'s would have been smaller.

SAIL

Examine sail through the lower row of rivets, Section A-A. Bending section consists only of sail (in tension) and an undetermined amount of compression area.

y = 2.975 in

I_{xx} = 71.138 in^4

S_{xx_t} = 23.91 in^3

x = 5.375 in

I_{yy} = 39.124 in^4

S_{yy} = 7.2789 in^3

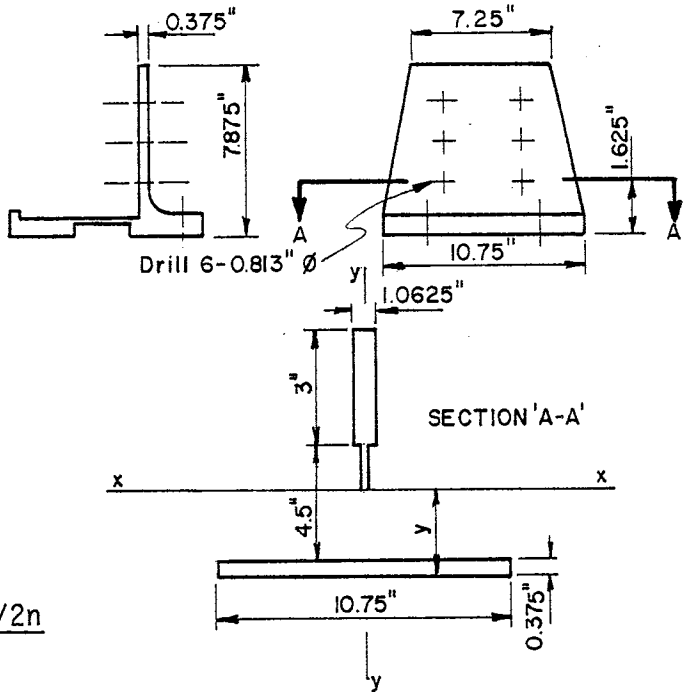

On the tension side,

e = 22.8125

So,

$$F_t = \frac{22.8125\ P}{S_{xx_{max}}} + \frac{22.8125\ P/2n}{S_{yy}}$$

where n is the number of posts in a continuous rail length.

So for,

n = 4 P_{all} = 12.63 kips

n = 3 P_{all} = 11.50 kips

n = 2 P_{all} = 9.78 kips

The above does not consider stress concentrations. Nor does it consider bending of toe and base plate.

On compression side,

$$F_c = \frac{22.8125\ P}{S_{xx_{comp}}} + \frac{22.8125\ P/2n}{S_{yy}}$$

where $S_{xx_{comp}}$ = 71.1382/4.9 = 14.5 in^3

So for,

n = 4 P_{all} = 9.68 kips

n = 3 P_{all} = 9.07 kips

n = 2 P_{all} = 8.07 kips

SAIL BASE PLATE BENDING

Consider the bending of the sail base plate fitting. The probable worst case situation is to assume the loads are simply applied to the fitting as shown.

$Q = F_t\ A/\cos(40.23°)$

$= 1.31\ F_t\ A$

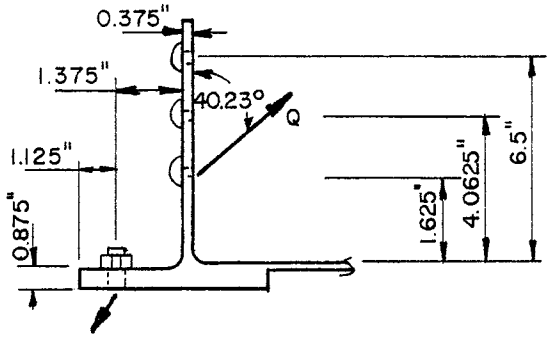

For bending multiply the horizontal component of Q times the distance 1.625 in.

$M = F_t\ A\ (1.375/1.625)(1.625) = 1.375\ F_t\ A$

and for bending only,

$$\sigma = \frac{1.375\ F_t\ A\ (6)}{bh^2} = \frac{8.25\ F_t}{h}$$

using F_t due to M_{xx} only.

So,

$$F_t = \left[\frac{22.8125\ P}{S_{xx}}\right]\left[\frac{8.25}{n} + 1\right] + \frac{22.8125\ P/2n}{S_{yy}}$$

where F_t = 25 ksi.

So for,

n = 4	P_{all} = 1120 lb
n = 3	P_{all} = 1120 lb
n = 2	P_{all} = 1100 lb

These allowable loads are of course, ultra conservative and represent a lower limit of the many possible solutions.

Analysis of sail base plate assuming bending of sail and toe of base plate as shown.

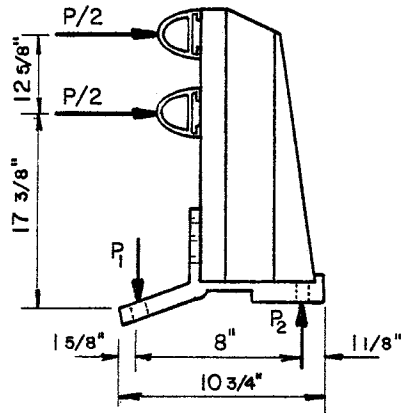

P_1 = 2.961 P

Free body diagram of toe of base plate is:

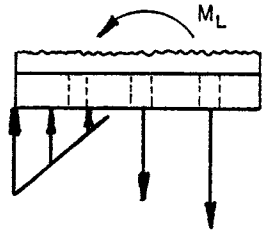

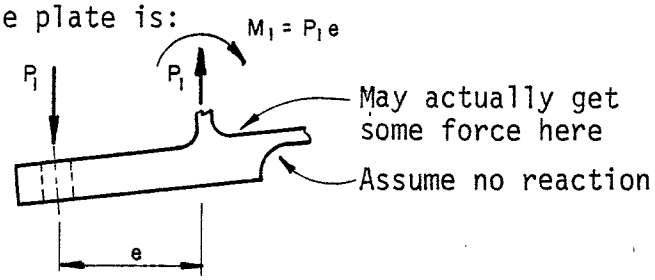

This failure mode appears reasonable when compared with those observed in the full-scale crash tests. See Figure .

e = 1.563 in

$M_1 = P_1\ e$ = 4.628 P

M_L = 1/2n [P/2 (17.375) + P/2 (17.375 + 12.625)]

Where n is number of posts in continuous length of rail, $n \leq 4$.

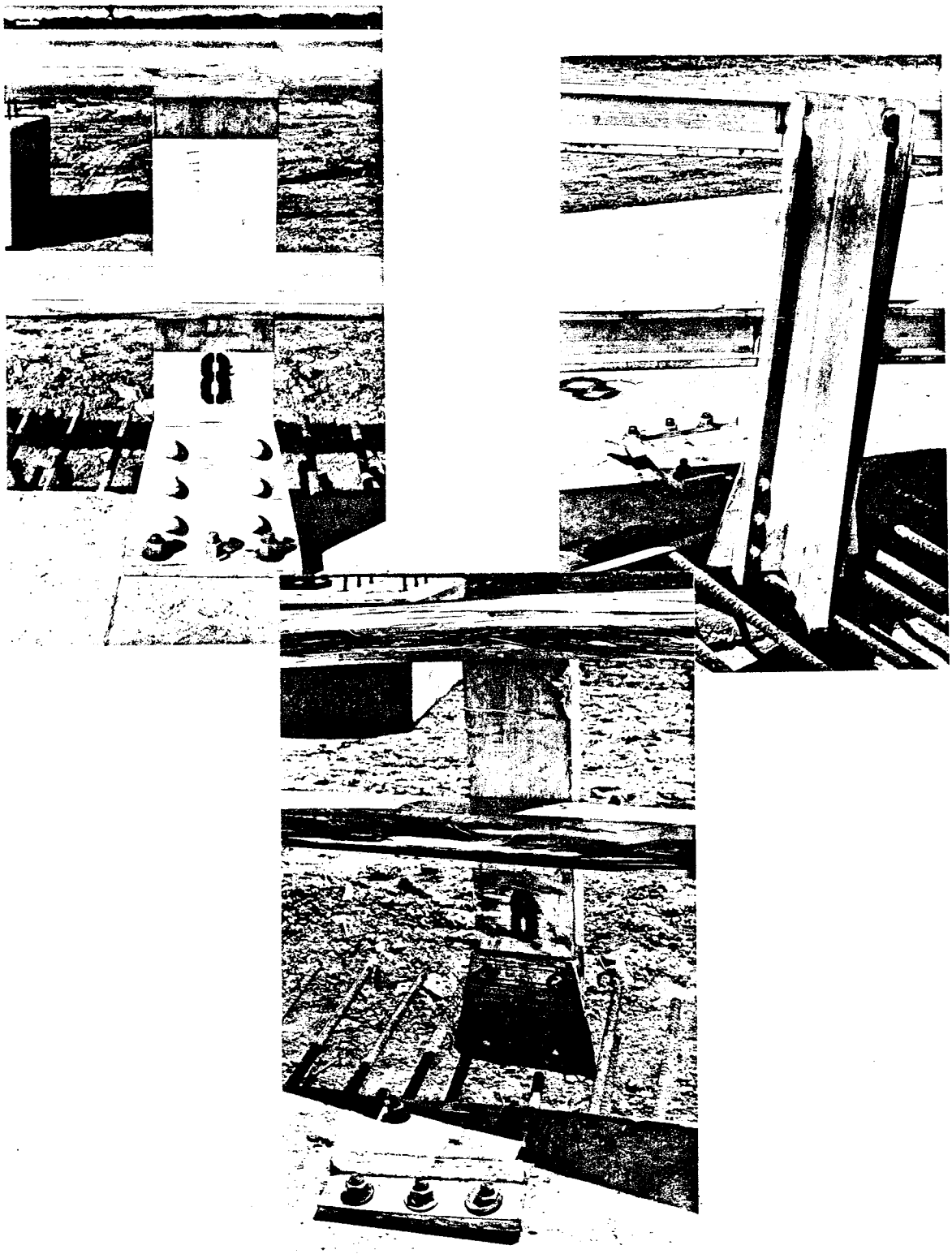

Figure . Post 8 Before and After Test 3451-26.

$$M_L = \frac{11.844\ P}{n}$$

Now compute areas and section moduli for sail.

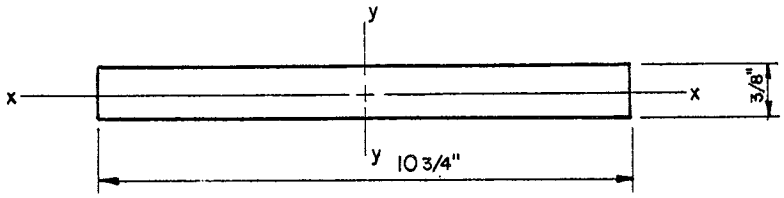

$A = 4.03\ in^2$

$I_{xx} = 0.0472\ in^4$

$S_{xx} = \underline{0.25\ in^3}$

$I_{yy} = 38.82\ in^4$

$S_{yy} = \underline{7.22\ in^3}$

Now compute allowable load

$F_{all} = 25\ ksi$

$$f = \frac{P}{A} \pm \frac{M_1}{S_{xx}} \pm \frac{M_L}{S_{yy}}$$

For most severe case of tension,

$$f_{ten} = \frac{2.961\ P}{A} + \frac{4.628\ P}{S_{xx}} + \frac{11.844\ P}{S_{yy}}$$

Where $f_{ten} = F_{all} = 25\ ksi$

So for,

$n = 4$ $\quad P_{all} = 1270\ lb$

$n = 3$ $\quad P_{all} = 1260\ lb$

$n = 2$ $\quad P_{all} = 1250\ lb$

APPENDIX B

ULTIMATE STRENGTH ANALYSES OF BRIDGE RAILINGS

An ultimate strength, structural analysis was performed on each of the five railing systems: Colorado Type 5 Rail, Texas T101 Traffic Rail, New Hampshire Two-Bar, North Carolina One-Bar, and Indiana 5A Bridge Rail.

The failure mechanism and the number of posts involved in the mechanism are dependent upon the span-wise distribution of the load applied by the impacting vehicle. Several mechanisms for each railing system were investigated.

These analyses and the results are presented on the following pages.

RAIL TYPE	POST CAPACITY (kips)	1-SPANS (kips)	2-SPANS (kips)	3-SPANS (kips)
Colorado Type 5	31.3	77.1	64.9	84.1
Texas T101	20.8	32.4	35.1	50.8
New Hampshire 2-Bar	30.6	39.5	47.9	72.3
North Carolina 1-Bar	18.1	120.6	93.5	--
Indiana Type 5A	28.4	43.3	46.7	68.4

Table . Ultimate Loads for Each Type of Rail Tested.

SUMMARY
PLASTIC ANALYSIS
COLORADO BRIDGE RAIL
Calculated Ultimate Load, P_u[kips]

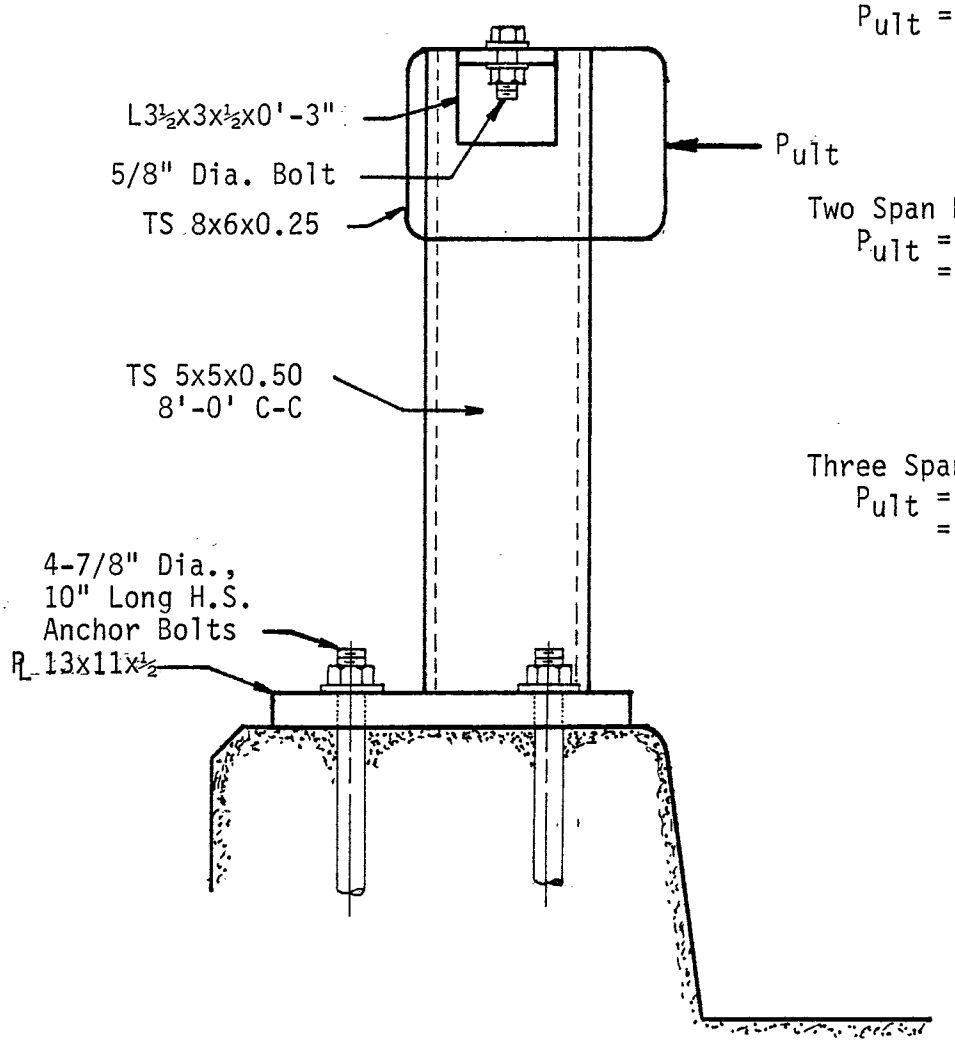

Single Span Mechanism
P_{ult} = 77.1 kips

Two Span Mechanism
P_{ult} = 33.6 + 31.3
= 64.9 kips

Three Span Mechanism
P_{ult} = 21.5 + 62.6
= 84.1 kips

PLASTIC ANALYSIS OF COLORADO TYPE 5 RAIL

BEAM

TS 8 x6 x 0.25

$Z_x = 19.13\ in^3$

$F_y = 36\ k/in$

$M_p = F_y Z_x = 57.4$ k-ft

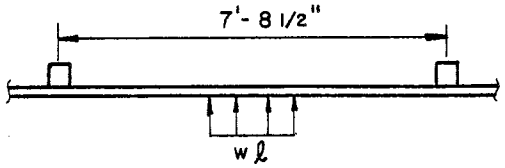

Load distributed over 42" tire (ℓ)

One Span:

$$(w\ell)_{ult} = \frac{8\ M_p}{L - \ell/2} = 77.1 \text{ kips}$$

Two Spans:

$(w\ell)_{ult} = 33.6$ kips

Three Spans:

$(w\ell)_{ult} = 21.5$ kips

POST

TS 5 x 5 x 0.50

$Z_x = 15.25\ in^3$

$M_p = 45.75$ k-ft

Moment Arm = 1.46 ft

$$P_{ult} = \frac{M_p}{\text{Moment Arm}} = 31.3 \text{ kips}$$

Note: Post Controls

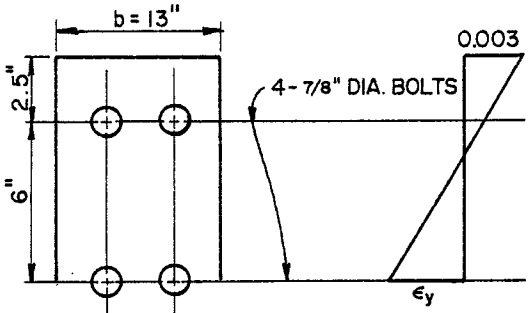

ANALYSIS OF ANCHOR BOLTS

ANCHOR BOLTS

Find maximum moment bolts can support. Assume first row of bolts have yielded, and second row is in compression; $f_1 = f_y$, $f_2 = 0$.

From AISC 5-195

$T_{ult} = 55.7^{k}$

$A_t = 0.4617\ in^2$

$f'_c = 3.6$ ksi

$$f_y = \frac{T_{ult}}{A_t} = 120.67 \text{ ksi}$$

$N_c = 0.85\ (f'_c)\ b\ (0.85\ c) = 33.81\ c$

$N_t = 2\ (T_{ult}) = 111.4^{\ k}$

Let $N_c = N_t$; c = 3.3 in > 2.5 in

Therefore the second row is in compression; $f_2 = 0$.

$M_u = N_t\ (d - a/2)$ a = 2.8 in

$M_u = 790.9$ k-in

$P_{ult} = 45.2^{\ k}$

CURB ANCHORAGE

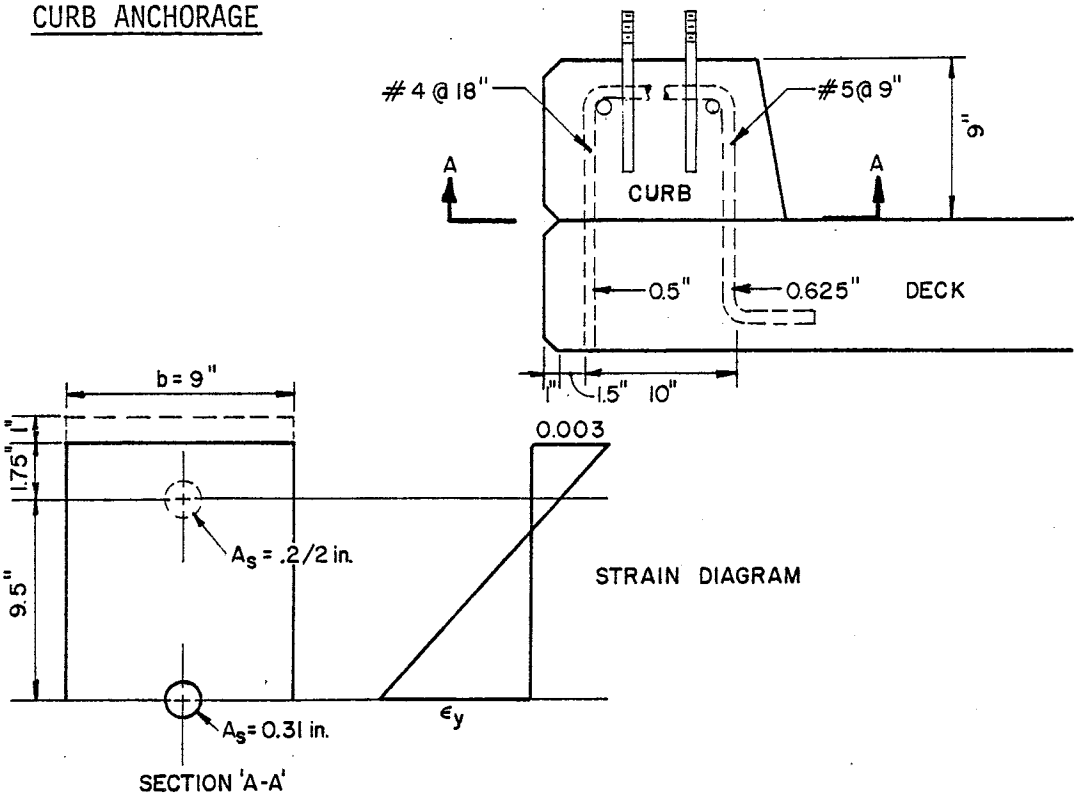

Assume steel in compression is negligible.

$\beta = 0.85$ $\phi = 0.9$

b = 9 in per 3/4 ft of curb d = 11.25 in

$f_y = 40$ ksi

$$a = \frac{A_s\ f_y}{\beta\ f'_c\ b} = 0.44 \text{ in}$$

$M_{ult} = \phi A_s\ f_y\ (d - a/2) = 13.68$ k-ft per ft of curb

POST LOAD

Moment required to anchor post equals P_{ult} for the post times the rail height.

31.3 kips x 2.25 ft = 70.43 k-ft

$$\frac{70.43 \text{ k-ft}}{13.68 \text{ k-ft/ft of curb}} = 5.15 \text{ ft of curb required to hold post (5.15 < 7.7 ft; ok)}$$

ULTIMATE CAPACITY

One Span		P_{ult} = 77.1 kips
Two Spans	33.6 kips	
One Post	31.3	
	64.9	P_{ult} = 64.9 kips
Three Spans	21.5 kips	
Two Posts	62.6	
	84.1	P_{ult} = 84.1 kips

SUMMARY
PLASTIC ANALYSIS
TEXAS T101 TRAFFIC RAIL

Calculated Ultimate Load, P_u[kips]

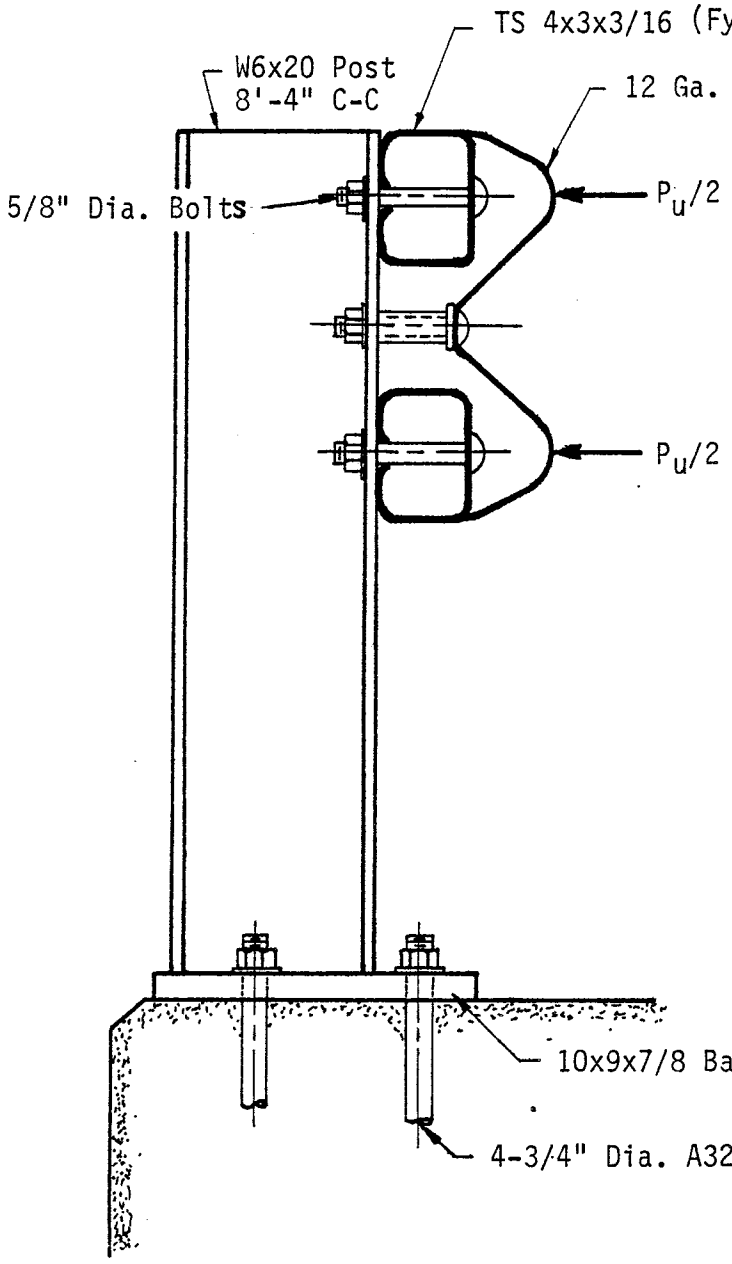

Single Span Mechanism
P_{ult} = 32.4 k

Two Span Mechanism
P_{ult} = 14.3 + 20.8
= 35.1

Three Span Mechanism
P_{ult} = 9.2 + 41.6
= 50.8

PLASTIC ANALYSIS FOR TEXAS T101

BEAM

TS 4 x 3 x 3/16 F_y = 50 ksi

S = 2.23 in^3 f = 1.19

Z = 2.65 in^3

M_p = 11.06 k-ft

12 ga. W-beam

S = 1.37 in^3 F_y = 40 ksi

Z = 1.84 in^3

When deflection for this shape becomes large enough to develop a mechanism, the W-beam flattens out and offers very little plastic moment. Therefore the elastic moment, M_y, is used in these calculations.

M_y = 4.57 k-ft

Total M_p = 2 (11.06) + 4.57 = 26.69 k-ft

One Span:

ℓ = 3.5 ft, L = 8.33 ft/span

$$(w\ell)_{ult} = \frac{8 \times M_p}{L - \ell/2} = 32.4 \text{ kips}$$

Two Spans:

$(w\ell)_{ult}$ = 14.3 kips

Three Spans:

$(w\ell)_{ult}$ = 9.2 kips

POST

W6 x 20 F_y = 36 ksi

Z = 15 in^3

M_p = 540 k-in

Moment Arm = 20.12 in

P_{ult} = 26.83 kips

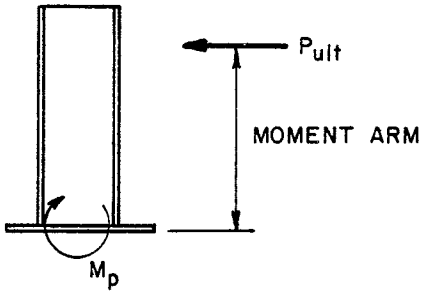

WELD AT BASE PLATE

For 3/8 in fillet weld all around

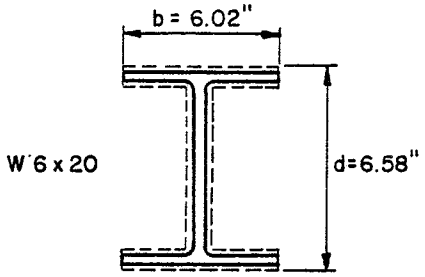

$S_w = 2\ bd + \frac{d^2}{3}$

$S_w = 93.66\ in^2$

From Table 5 p. 7.4-7 Design of Welded Structures, by Blodgett.

$F_w = 70$ ksi

f = lbs-force/inch of weld = (0.707) (size weld) $0.3\ F_w$

f = 5.567 kips/in

$M = S_w\ f = 521.4$ k-in

$P = \frac{521.4}{20.125} = 25.9^{k}$

ANCHOR BOLTS

Find the maximum moment bolts can support. Assume the first row of bolts have yielded and the second row is in tension: $f_1 = f_y$, $f_2 \neq 0$.

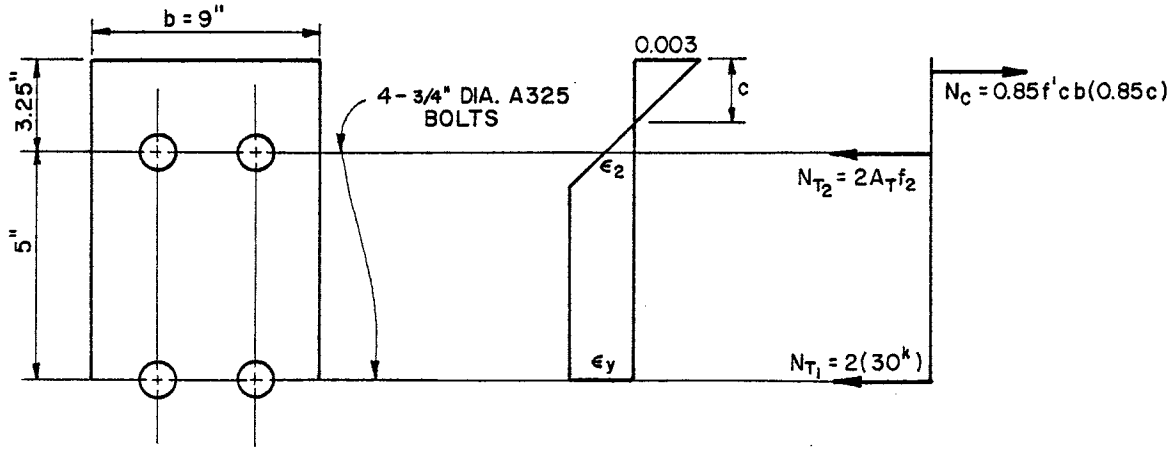

From tensile tests, actual strength of bolts and nuts in tension equals 30 kips per bolt.

$$f_y = \frac{30\ ^k}{0.3345\ in^2} = 89.69\ ksi \qquad f'_c = 3.6\ ksi$$

$$N_t = N_{t_1} + N_{t_2} = 60 + 0.669\ f_2$$

$$N_c = 23.41\ c$$

by similar triangles, $c = \frac{3.25\ (87)}{f_2 + 87}$

Let $N_t = N_c$

$$0.669\ f_2^2 + 118.2\ f_2 - 1399 = 0$$

$$f_2 = 11.13\ ksi$$

$c = 2.88$ $\qquad a = 2.45$

$N_{t_1} = 60\ ^k$

$N_{t_2} = 7.44\ ^k$

$N_c = 67.44\ ^k$

$\Sigma M_{nc} = M_u = 436.9$ k-in

$P = \frac{M_u}{L} = 20.8$ kips

Note: This controls, therefore, $P_{ult} = 20.8\ ^k$

ULTIMATE CAPACITY

One Span		$P_{ult} = 32.4$ kips
Two Spans	14.3 kips	
One Post	20.8	
	35.1	$P_{ult} = 35.1$ kips
Three Spans	9.2 kips	
Two Posts	41.6	
	50.8	$P_{ult} = 50.8$ kips

SUMMARY
PLASTIC ANALYSIS
NEW HAMPSHIRE BRIDGE RAIL

Calculated Ultimate Load, P_u[kips]

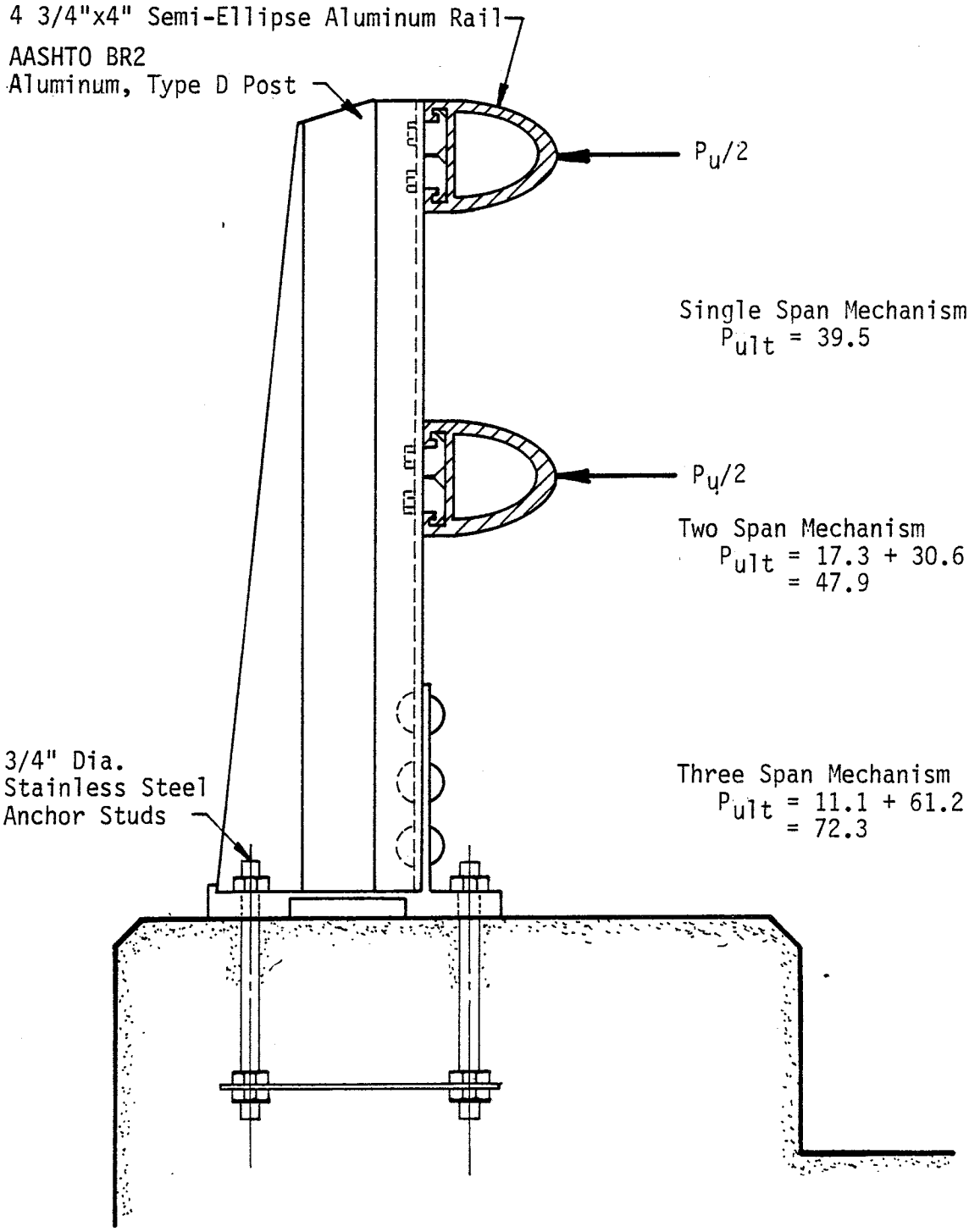

PLASTIC ANALYSIS FOR NEW HAMPSHIRE 2-BAR

BEAM

4 3/4 " x 4 " Semi-Ellipse Aluminum Rail

F_y = 35 ksi $\qquad Z_x = 5.29\ in^3$

$M_p = F_y Z_x = 185.15$ k-in

L = 8 ft/span $\qquad \ell = 42$ inches

For One Span--Two Rails

$$(w\ell)_{ult} = 2\left(\frac{8\,M_p}{L - \ell/2}\right) = 39.5 \text{ kips}$$

For Two Spans--Two Rails

$(w\ell)_{ult}$ = 17.3 kips

For Three Spans--Two Rails

$(w\ell)_{ult}$ = 11.1 kips

POST

By similar triangles; x = 2.165 in

For failure at section A-A; find plastic moment for section A-A (top of sail).

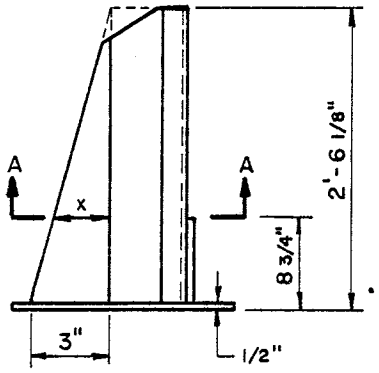

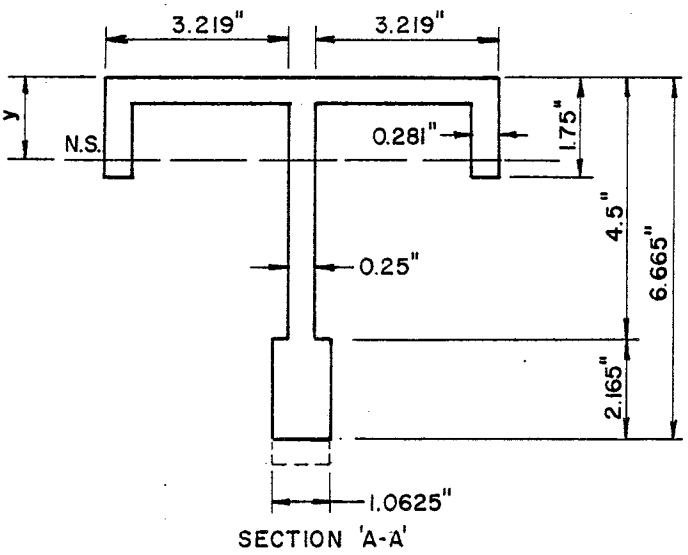

SECTION 'A-A'

Neutral Axis is half-area.

y = 1.184 inches measured from the front of post.

$Z_x = \frac{A}{2} a$ $\quad F_y = 35$ ksi

$M_p = F_y Z_x = 486.5$ k-in

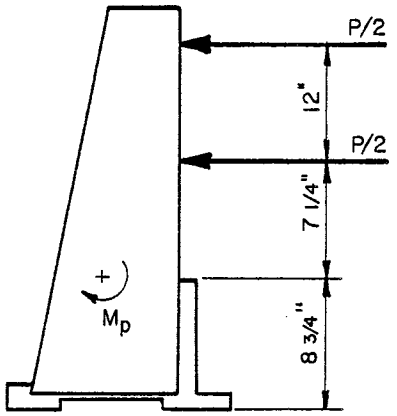

$\circlearrowleft + \Sigma M = 0$

$0 = M_p - P/2\ (19.25) - P/2\ (7.25)$

$P = 36.72$ k

ANCHOR BOLTS

Find maximum moment:

Assume the first row of bolts have yielded, $f_1 = f_y$ and the second row is in compression, $f_2 = 0$.

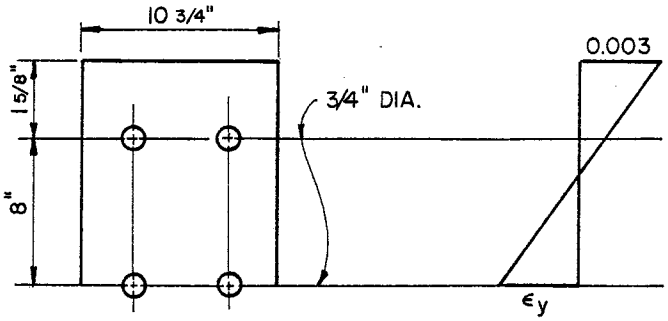

$f'_c = 3.6$

From AISC 5-195,

$T_{ult} = 40$ k/bolt

$A_{tens} = 0.3345$ in^2/bolt

$F_y = \frac{T_{ult}}{A_{tens}} = 119.58$ ksi

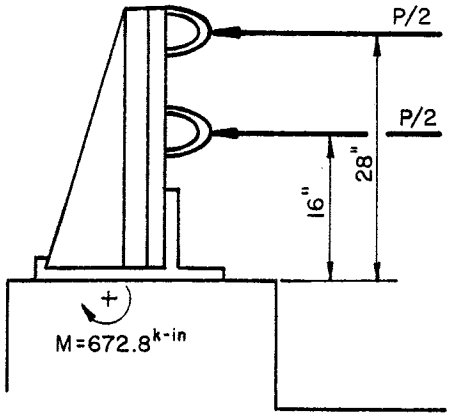

$N_t = 2\ (T_{ult}) = 80$

$N_c = .85\ (f'_c)(b)\ 0.85\ c = 27.96\ c$

Let $N_t = N_c$

Then; $c = 2.86$ in > 1.63 in; $f_2 = 0$ o.k.

$a = 2.43$ in

$M_u = N_t\ (d - a/2) = 672.8$ k-in

Note: $P_{ult} \doteq 30.58$ kips controls.

Find P_{ult}:

$\Sigma M = 0 = 672.8 - P/2\ (16 + 28)$

$P_{ult} = 30.58$ kips

CURB

Assume first and second row of bolts have yielded; $f_1 = f_2 = f_y$.

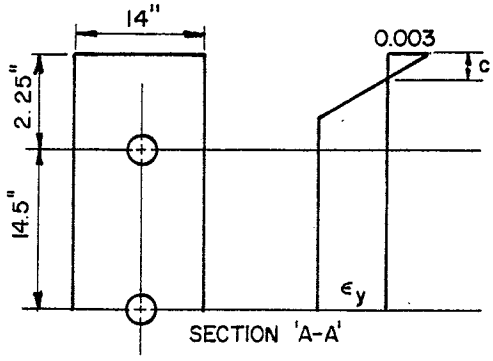

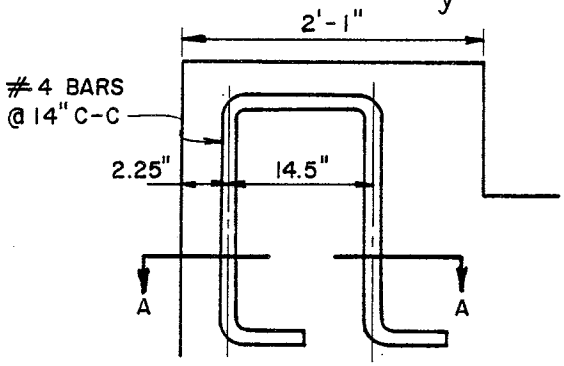

$f'_c = 3.6$ ksi

$f_y = 40$ ksy

$A_{s_1} = A_{s_2} = 0.2$ in^2

$F_y = 8$ kips

$N_t = 2 F_y = 16$ k

$N_c = 0.85 (f'_c)(b)(0.85 c) = 36.41 c$

Let $N_t = N_c$; $c = 0.44$ in ; $a = 0.373$ in

$\Sigma M_c = 2.06 (8) + 16.56 (8)$

$M_{ult} = 149.0$ k-in/14 in of curb

$M_{ult} = 127.7$ k-in/ft of curb

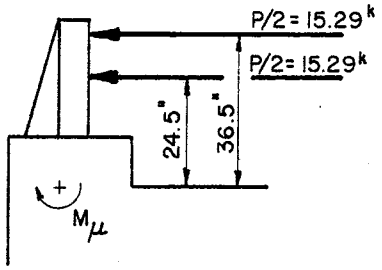

$M_u = 15.29 (36.5 + 24.5)$

$= 932.69$ k-in

For post capacity of 30.58 kips the required length of curb is 7.3 ft which is less than the actual 8 ft.

ULTIMATE CAPACITY

One Span		$P_{ult} = 39.5$ k
Two Spans	17.3 k	
One Post	30.58	
	47.88	$P_{ult} = 47.88$ k
Three Spans	11.1 k	
Two Posts	61.16	
	72.26	$P_{ult} = 72.26$ k

SUMMARY
PLASTIC ANALYSIS
NORTH CAROLINA BRIDGE RAIL

Calculated Ultimate Load, P_u[kips]

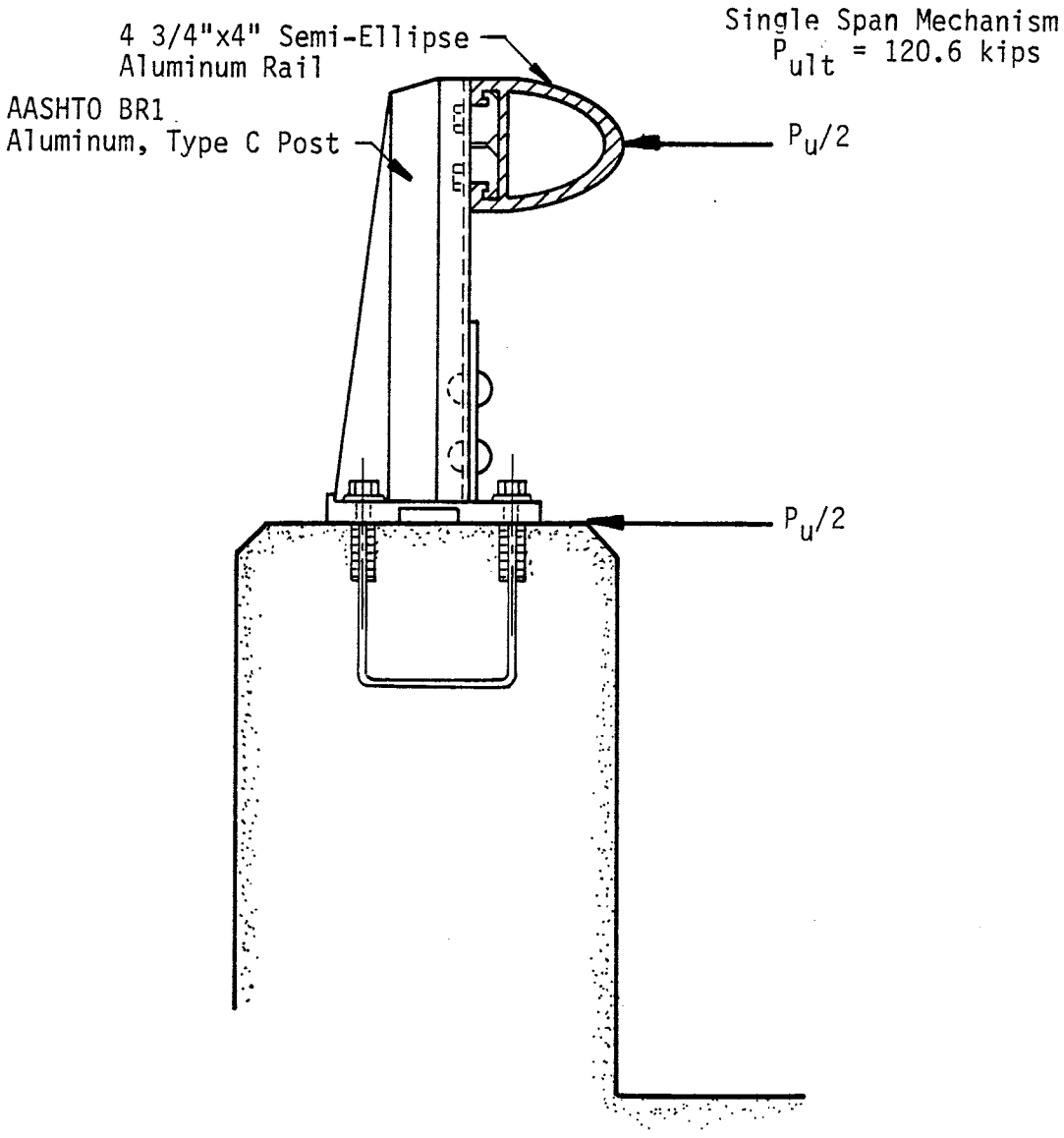

PLASTIC ANALYSIS FOR NORTH CAROLINA 1-BAR

BEAM

4 3/4 " x 4 " Semi-Ellipse Aluminum Rail

F_y = 35 ksi $\qquad Z_x = 5.29\ in^3$

Post Spacing = 6' - 6"

ℓ = 42 in

$M_p = F_y Z_x = 185.15$ k-in

One Span--One Rail

$$(w\ell)_{ult} = \frac{8 M_p}{L - \ell/2} = 25.99 \text{ kips}$$

Two Spans

$(w\ell)_{ult}$ = 10.97 kips

Three Spans

$(w\ell)_{ult}$ = 6.95 kips

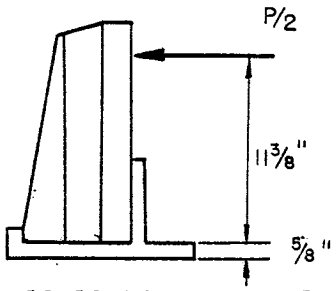

Note: P/2 = 18.13 kips controls

POST

At Base

Z_x = 5.89 in^3

F_y = 35 ksi

M_p = 206.17 k-in

P/2 = 18.13 kips

ANCHOR BOLT CONNECTIONS

Find moment capacity;

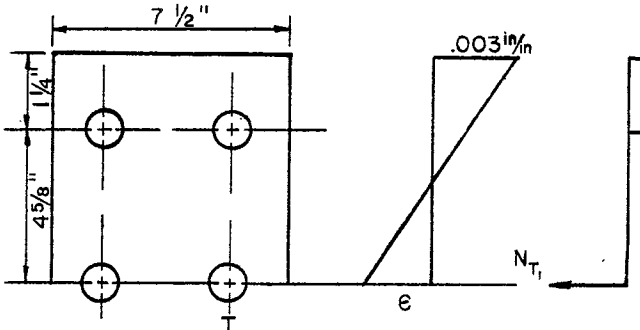

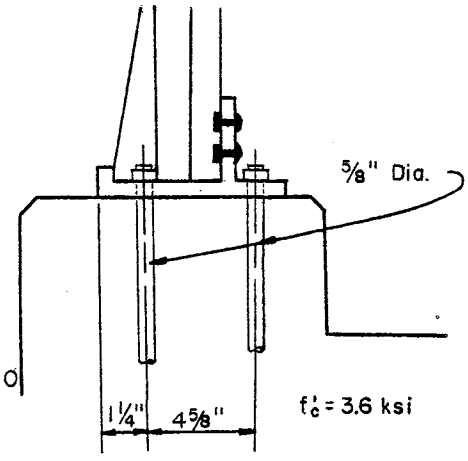

$$f_y = \frac{T_{ult}}{A_{tens}} = 120.1 \text{ ksi}$$

From AISC 5-195,

T_{ult} = 27.14 k/bolt

A_{tens} = 0.2260 in^2/bolt

Assume concrete yields before bolts, and the force on the top bolts is negligible.

$N_c = 0.85\ (F'_c)(b)(0.85\ c) = 19.5\ c$

$N_t = 2\ (A_{tens})(f) = 0.452\ f$

$$c = \frac{(d)(.003)}{f/29{,}000 + .003} = \frac{511.125}{f + 87}$$

Let $N_c = N_t$ and substitute the above equation in for c.

$$\frac{19.5\ (511.125)}{f + 87} = 0.452\ f$$

$0 = -9966.9 + 39.32\ f + 0.452\ f^2$

$f = 111.24$ ksi $< 120.1 = f_y$

$c = 2.58$ in, $a = 2.19$ in

$N_t = 50.28$ k

$M_u = N_t\ (d - a/2) = 240.1$ k-in

$$P/2 = \frac{M_u}{12\text{ in}} = \underline{20.0\ k}$$

CONCRETE WALL

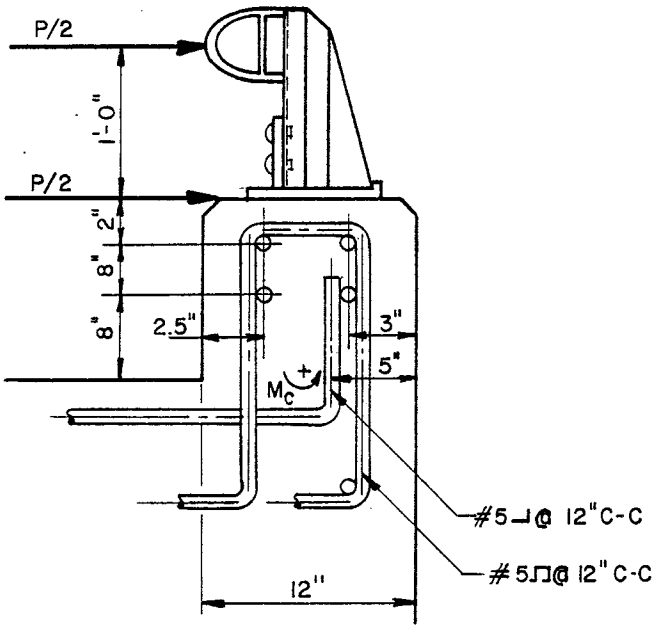

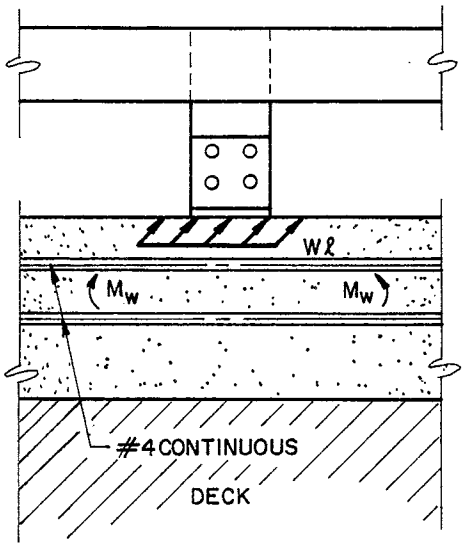

Compute M_c and M_w, Assume the steel in compression is negligible and find the total load $w\ell$ the parapet will support.

From Research Report 230-2

"Analytical Evaluation of Texas Bridge Rails to Contain Buses and Trucks" by T. J. Hirsch.

For a concrete parapet:

$$a = \frac{A_s f_y}{\beta f'_c b} = 0.68 \text{ in} \quad (\text{for } M_c)$$

$$M_c = \phi A_s f_y (d - a/2) = 13.14 \text{ k-ft/ft of curb}$$

$$a = 0.29 \text{ in} \quad (\text{for } M_w)$$

$$M_w = 11.23 \text{ k-ft}$$

$$\ell = 3.5 \text{ ft} \qquad H = 1.5 \text{ ft}$$

$$L = \ell/2 + \sqrt{(\ell/2)^2 + 8H\left(\frac{M_w H}{M_c}\right)} = 5.40 \text{ ft}$$

$$w\ell = \frac{8 M_w H}{L - \ell/2} + \frac{M_c L^2}{H (L - \ell/2)} = 94.6 \text{ kips}$$

IMPACT AT MIDSPAN

$$P_{total} = 26 + 94.6 = \underline{120.6\ ^k}$$

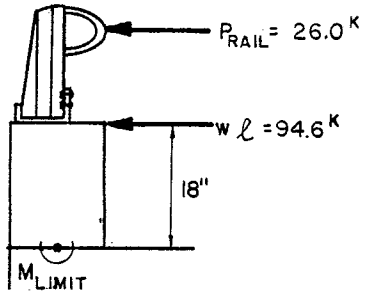

IMPACT AT POST

$M_{limit} = 94.6\ ^k \times 18 \text{ in} = 1702.8 \text{ k-in}$ (at post section)

$\Sigma M = 0 = M_{limit} - P_w' (18) - P_{post}(30)$

$P_w' = 64.4\ ^k$

$P_{total} = 93.5 \text{ kips}$

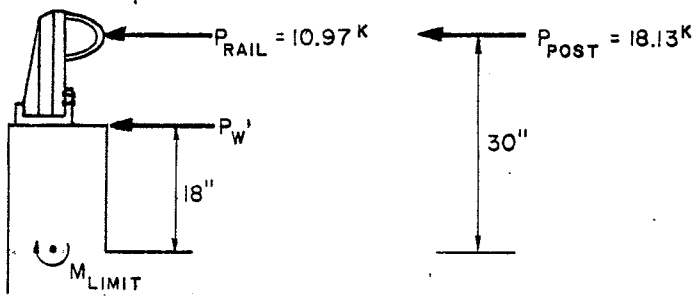

SUMMARY
PLASTIC ANALYSIS
INDIANA 5A BRIDGE RAIL

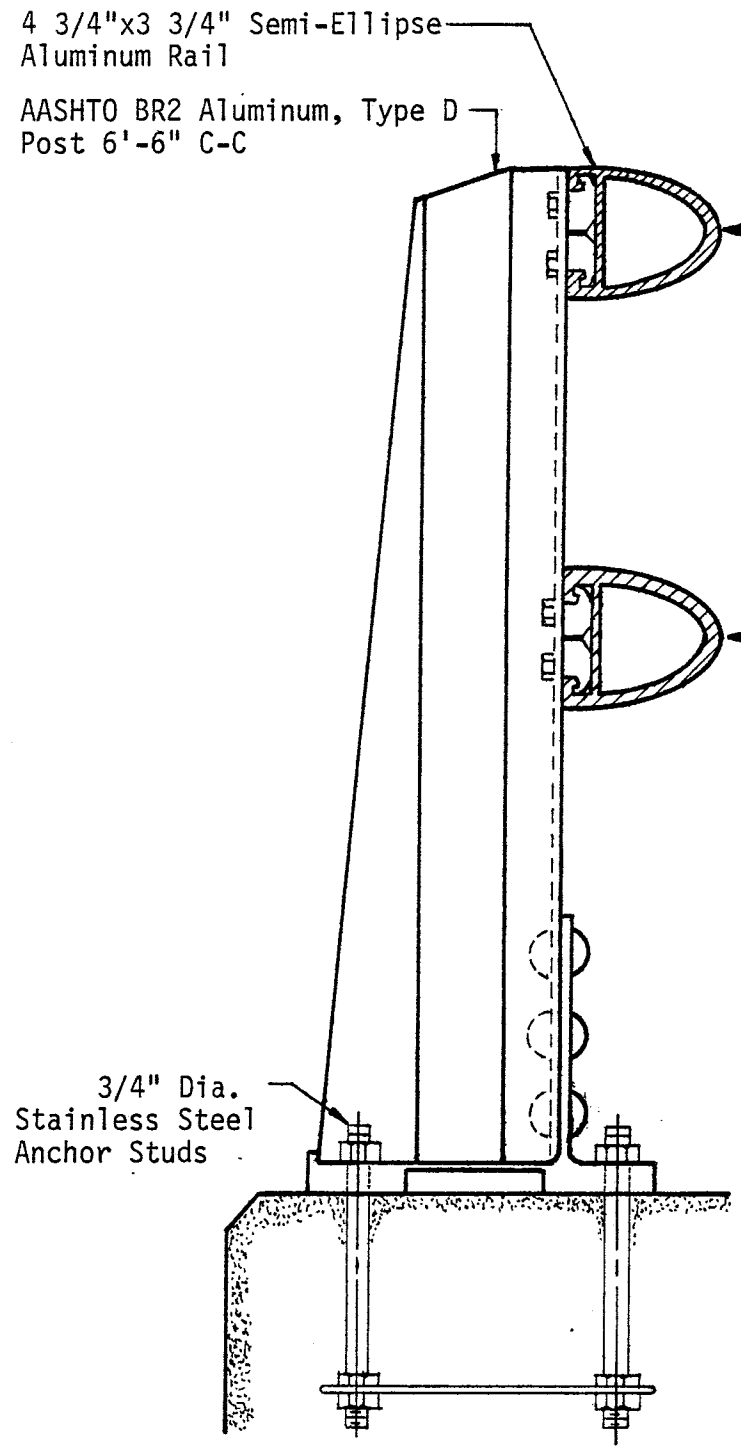

Calculated Ultimate Load, P_u[kips]

$P_u/2$

Single Span Mechanism
P_{ult} = 43.3 k

$P_u/2$

Two Span Mechanism
P_{ult} = 18.3 + 28.4
= 46.7

Three Span Mechanism
P_{ult} = 11.6 + 56.8
= 68.4

PLASTIC ANALYSIS FOR INDIANA TYPE 5A

BEAM

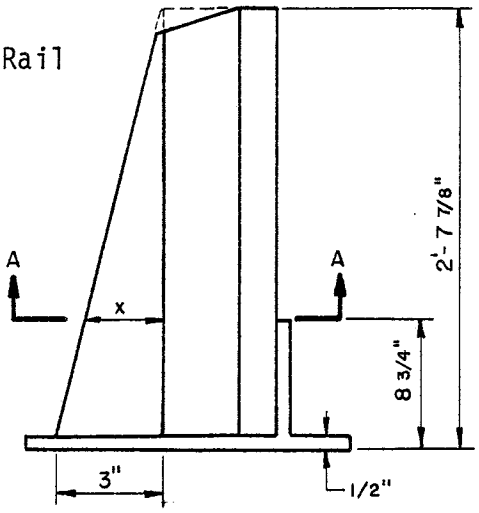

4 3/4" x 3 3/4" Semi-Elliptical Aluminum Rail

F_y = 35 ksi Z_x = 4.41 in^3

$M_p = F_y Z_x$ = 154.35 k-in

Post Spacing = 6' - 6" ℓ = 42 in

For One Span--Two Rails;

$$(w\ell)_{ult} = 2\left(\frac{8\,M_p}{L - \ell/2}\right) = 43.33\ ^{k}$$

For Two Spans--Two Rails;

$(w\ell)_{ult}$ = 18.29 ^{k}

For Three Spans--Two Rails;

$(w\ell)_{ult}$ = 11.59 ^{k}

POST

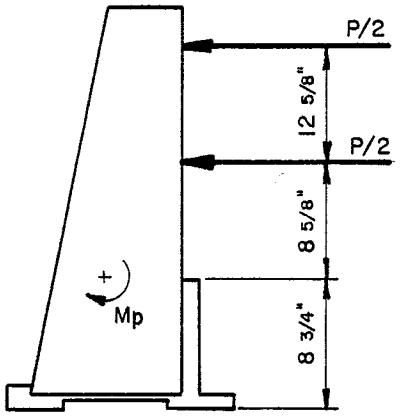

By similar triangles:

$$\frac{3}{31.375} = \frac{x}{(31.875 - 8.75)}$$

x = 2.211 in

Z_x = 13.9 in^3

M_p = 486.5 k-in

$\overset{+}{\circlearrowleft}\ \Sigma M = 0$

$0 = M_p - P/2\ (21.25) - P/2\ (8.625)$

P = 32.56 ^{k}

ANCHOR BOLT CONNECTION

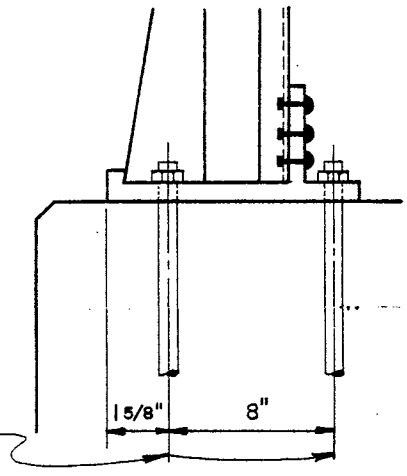

This base plate and anchor bolt design is the same as New Hampshire. From New Hampshire calculations, M = 672.8 k-in.

$\Sigma M = 0 = 672.8 - P/2\ (17.375 + 30)$

$P = 28.4^{k}$

Note: P = 28.4 kips controls.

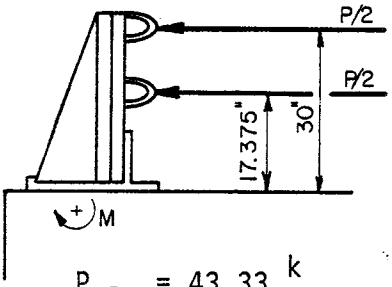

ULTIMATE CAPACITY

One Span

$P_{ult} = 43.33^{k}$

Two Spans	18.29^{k}
One Post	28.4
	46.69

$P_{ult} = 46.69^{k}$

Three Spans	11.59^{k}
Two Posts	56.8
	68.39

$P_{ult} = 68.39^{k}$

APPENDIX D

DEVELOPMENT OF PERFORMANCE STANDARDS

General

Performance of bridge railing systems has been addressed in many recent and on-going research studies (1, 2, 5, 7, 8, 9, 12, 13) as well as in other activities (17).

Olson, et al. set forth the following tentative service requirements for bridge rail systems:

1. *A bridge rail system must laterally restrain a selected vehicle.*
2. *A bridge rail system must minimize vehicle decelerations.*
3. *A bridge rail system must smoothly redirect a colliding vehicle.*
4. *A bridge rail system must remain intact following a collision.*
5. *A bridge rail system which serves vehicles and pedestrians must provide protection for vehicle occupants and pedestrians.*
6. *A bridge rail system must have a compatible approach rail or other device to prevent collisions with the end of the bridge rail system.*
7. *A bridge rail system must define yet permit adequate visibility.*

8. *A bridge rail must project inside the face of any required curb.*
9. *A bridge rail system must be susceptible of quick repair.*
10. *The foregoing requirements must be met by giving emphasis first to safety, second to economics, and third to aesthetics.*

Other studies, in addressing this problem, have basically arrived at the same conclusion: A bridge railing must contain and smoothly redirect the design vehicles without imposing undue hazard on the occupants. Various efforts have attempted to quantify the idea to various degrees. TRC 191; its predecessor, NCHRP Report 153; and not its successor, the final draft of NCHRP project 22-2(4) have set forth state-of-the-art testing and evaluation procedures for bridge railing systems and other highway appurtenances.

These efforts have been very fruitful in terms of contributions to the development of crashworthy highway hardware. They have allowed engineers to study, quantify, and to better understand behavior of hardware in collisions, and have resulted in formulation of some design procedures for crashworthiness. However, therein is where the greatest difficulty lies. While efforts to define collision forces and structural design procedures have been reasonably successful, efforts to synthesize and quantify the influence of geometrics of the vehicle and the hardware and interaction of the two have enjoyed less success. In other words, the greatest difficulty in setting forth prescription

specifications and design procedures lies with geometrics rather than the forces.

When working in this area of technology, there is a very appropriate Chinese proverb that might be paraphrased: "One test is worth a thousand expert opinions."

Some information gained from this study lends support to an argument for requiring that performance standards for bridge railing systems be met through full-scale crash tests. Shortcomings in the performance of some of the in-service railing systems were discovered only in full-scale crash tests.

The baseplate used on the New Hampshire and Indiana 5A railing systems, which is similar to the baseplate used on posts in many extruded aluminum systems, was found to be structurally weaker than anticipated from analysis. The fact that this element is the weak link is not an undesirable feature in itself. Designing with the weak link outside of the deck is, in fact, desirable. The difficulty encountered was that the strength of the railing was too low and this contributed to the relatively low capability of the system to contain and redirect a vehicle. Performance of this design was also influenced by geometric features which allowed snagging of the vehicle.

Some railing systems have been found to not meet the specifications in effect at the time of construction. Several explanations are given for this. Often the railing system was designed to meet an earlier specification and their use is simply continued. Implementation of a performance standard would probably eliminate this, but it would be treating the effect and not the cause.

Design Vehicles: Design vehicles considered in this study ranged from a Honda Civic (approximately 1,800 lb) to an intercity bus (approximately 32,000 lb). Intermediate vehicles used were a Chevrolet Vega (2,250 lb), a Plymouth Fury (4,500 lb), and a school bus (20,000 lb).

Weight and dimensions of any one class of vehicle vary to some degree. For this reason, available pertinent data for the various sizes of vehicles used in this study are presented in Figures D-1 through D-5. Transportation Research Circular 191 specifies a 2,250-lb and a 4,500-lb automobile for performance testing of bridge railing systems. The final draft of a document (__) prepared by Southwest Research Institute for NCHRP and intended to be the replacement for TRC 191 addresses a wider range of vehicle sizes. An 1,800-lb sedan is included in the series of design vehicles in the new document. The need for including this vehicle is well illustrated in Figure D-6. Heavier vehicles (utility bus, intercity bus, and heavy truck) are also included in the series of design vehicles.

The 2,250-lb automobile used in crash testing in the past has been one with a front-mounted engine and rear-wheel drive. Many times a Chevrolet Vega has been used. The 1,800-lb automobile has typically been a front-mounted engine, front-wheel drive Honda Civic. Also, Volkswagen Rabbits have been used frequently. Such a vehicle was selected because it was thought to be representative of automobiles in this size range that would be manufactured in the future. Impact behavior of the front-wheel drive automobile has been characteristically different than that of a rear-wheel drive vehicle. Some current production automobiles in the 2,000 to 3,000 lb range are front-wheel drive and the

trend toward front-wheel drive for all sizes of automobiles is expected to continue in the future. This should be monitored and the types of automobiles selected for crash testing should be reconsidered at some time in the future.

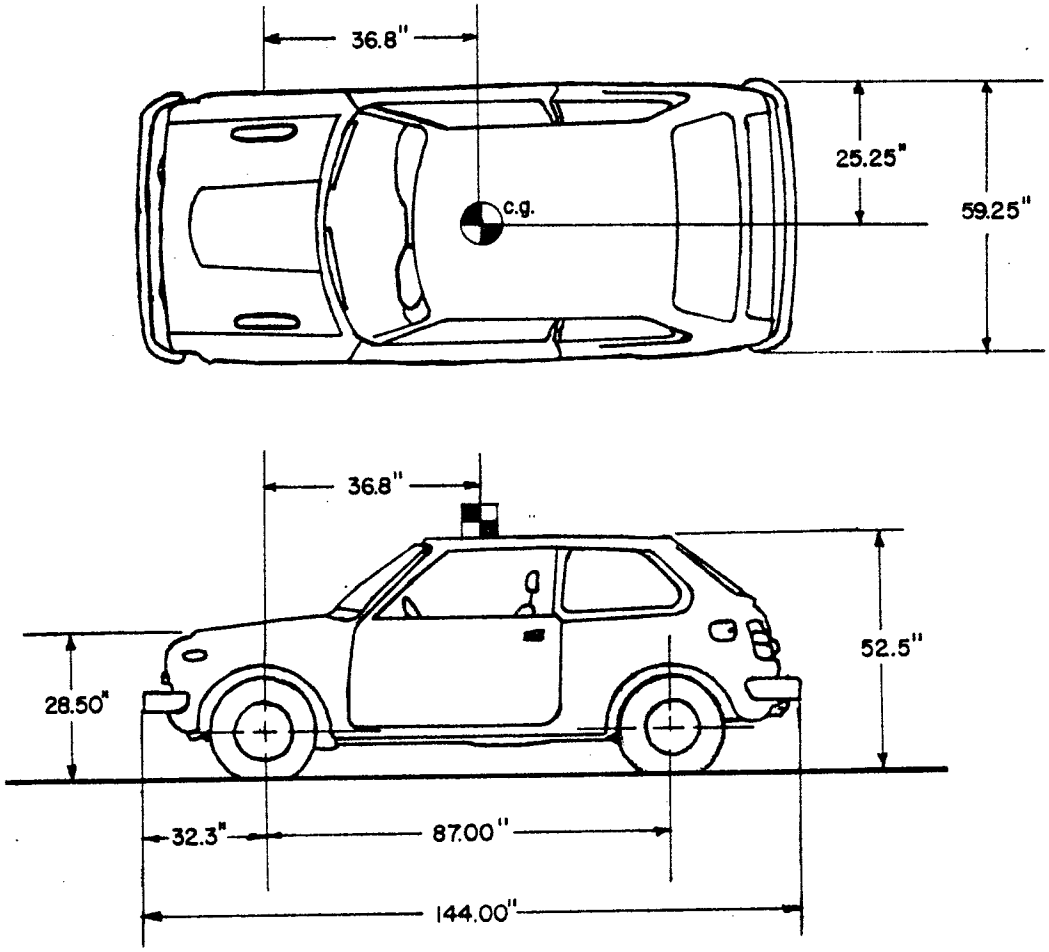

1800 lb Passenger Car

Note: 1 lb = .4536 kg

1 in = 2.54 cm

1 ft = .3048 m

D-1

Figure B1. Bridge Rail Design Car.

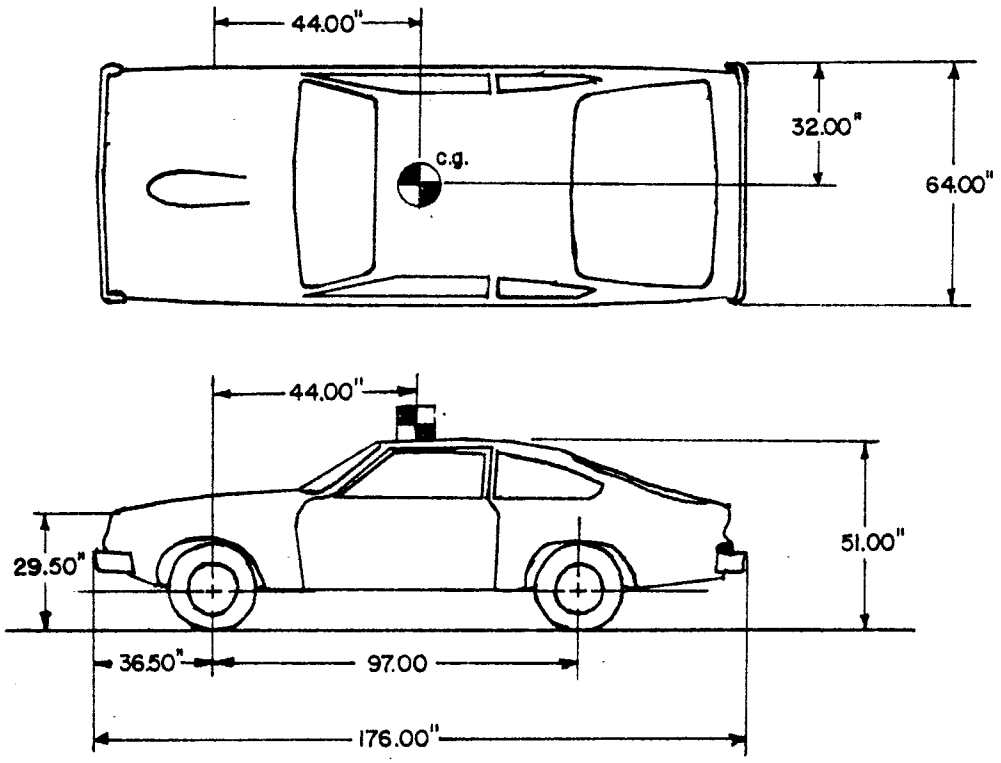

2250 lb Passenger Car

Note: 1 lb = .4536 kg
1 in = 2.54 cm
1 ft = .3048 m

Figure ~~B2.~~ D-2 Bridge Rail Design Car.

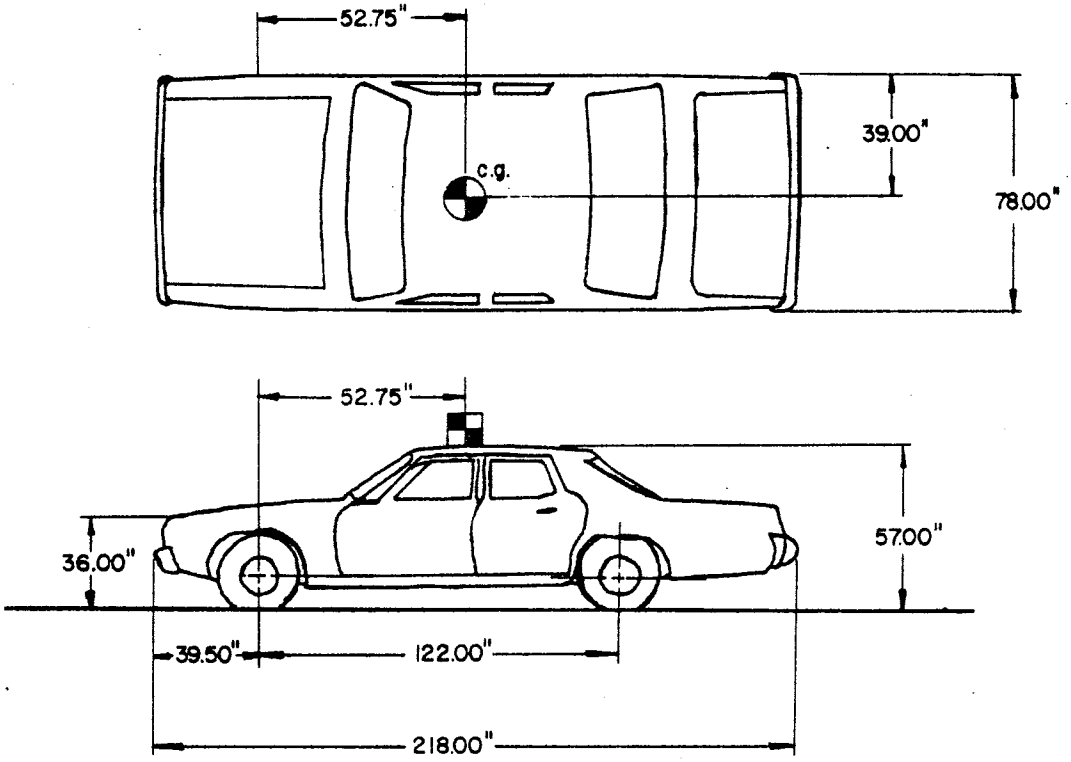

4500 lb Passenger Car

Note: 1 lb = .4536 kg

1 in = 2.54 cm

1 ft = .3048 m

Figure B3. (D-3) Bridge Rail Design Car.

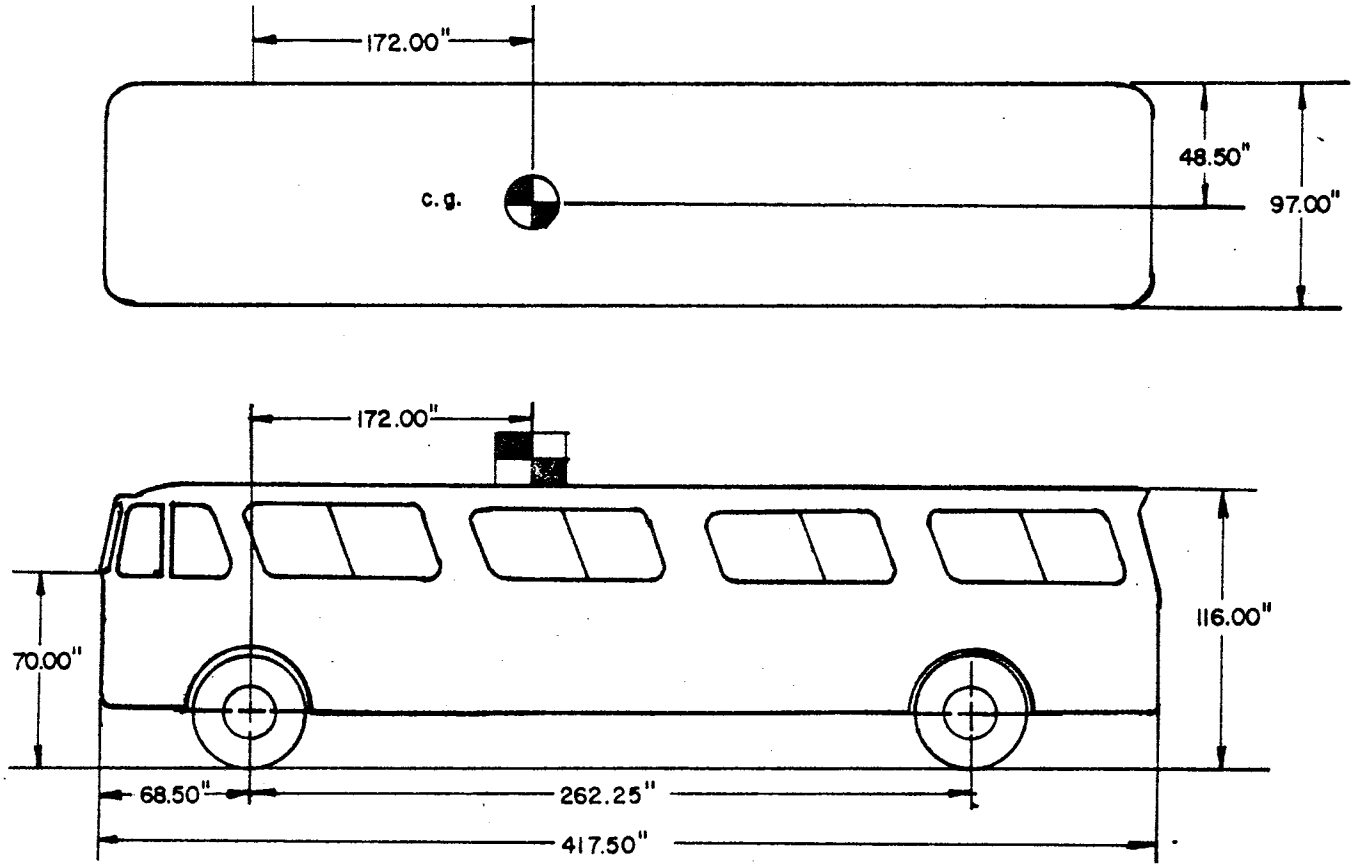

32,000 lb Large Intercity Bus

Length 34' 9 1/2" Width 8' 1"

Location of C.G. is 14' 4" from front axle

45 Passenger

Note: 1 lb = .4536 kg

1 in = 2.54 cm

1 ft = .3048 m

Figure ~~B5~~ D-4. Bridge Rail Design Bus.

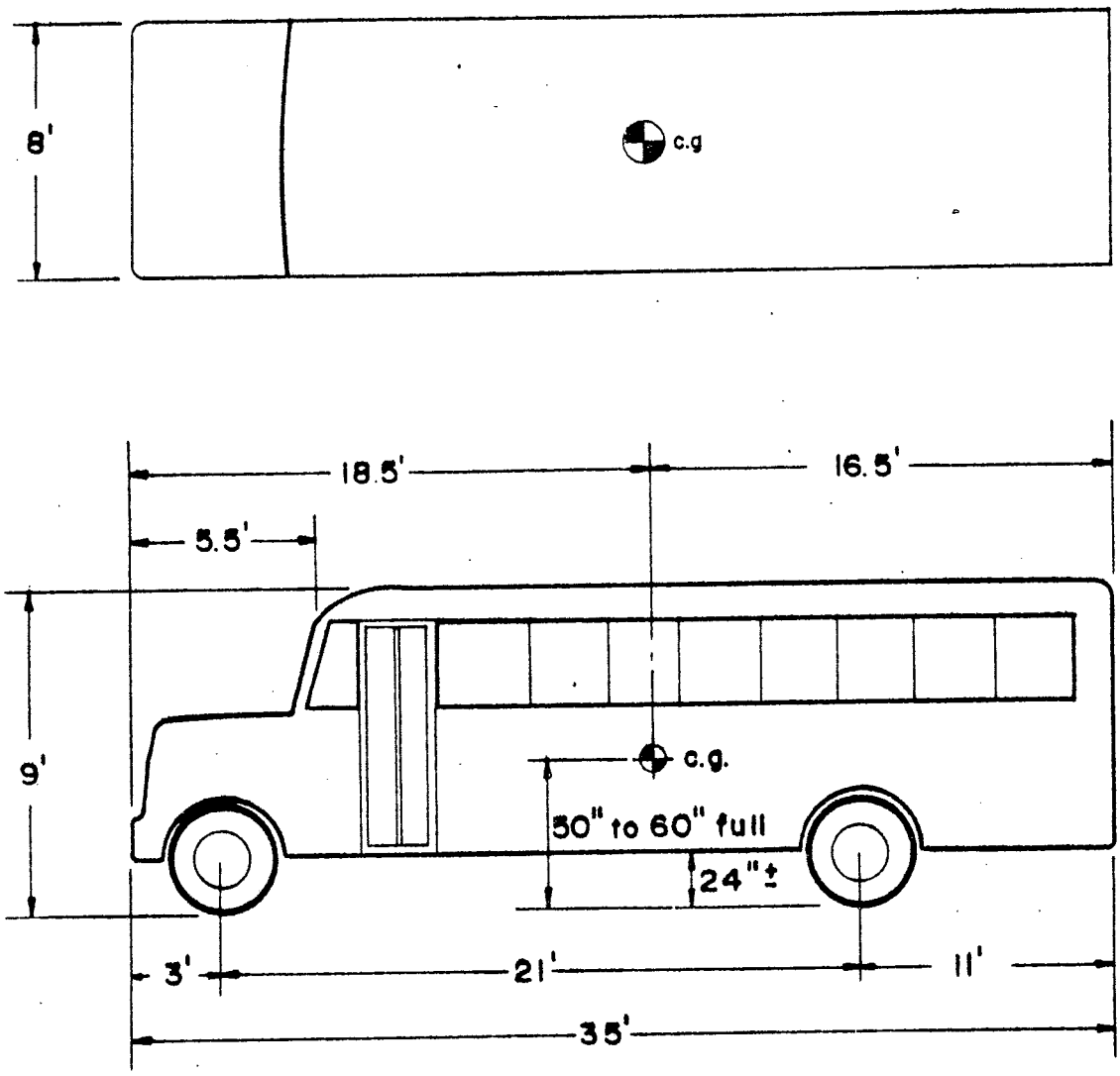

Typical 66 Passenger School Bus

Total Weight = 20,000 lbs

Empty 12,800 lb - C.G. = 44" to 60"

Passengers 7,200 lb - C.G. = 60"± (Avg. 109 lb passenger)

20,000 lb - C.G. = 50" to 60"

Note: 1 lb = .4536 kg

1 in = 2.54 cm

1 ft = .3048 m

Figure ~~B4~~ D-5. Bridge Rail Design School Bus.

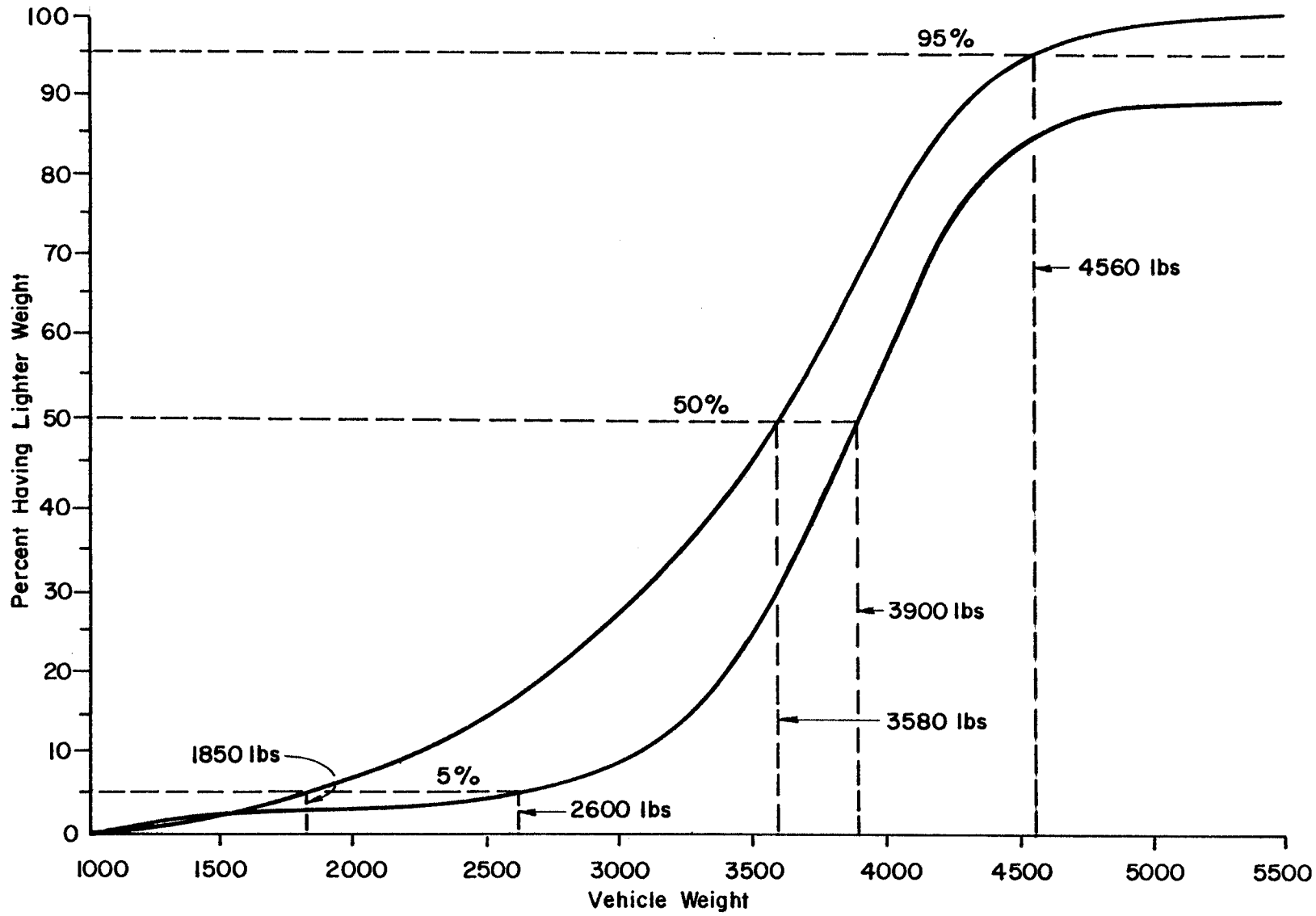
100
90
80
70
60
50
40
30
20
10
0
Percent Having Lighter Weight
95%
50%
5%
4560 lbs
3900 lbs
3580 lbs
1850 lbs
2600 lbs
1000
1500
2000
2500
3000
3500
4000
4500
5000
5500
Vehicle Weight

Figure D-6

Impact Severity

Several methods of quantifying impact severity either exist or have been proposed. Transportation Research Circular 191 which is currently followed in full-scale crash testing of bridge railing systems, sets forth upper limits on vehicle center-of-gravity accelerations for tests with 15-deg impact angles. Limits on maximum 0.050 sec average accelerations are 5 g's lateral, 10 g's longitudinal, and 12 g's total. FMVSS 208 (which is referenced in TRC 191) sets forth limits on injury indices determined from anthropomorphic dummies for acceptable performance of occupant restraint systems. These limits are a resultant chest acceleration of 60 g's and a Head Injury Criterion (HIC) of 1,000. Currently proposed revisions to TRC 191 consider the flail space and specify upper limits on the differential speed at which the dummy strikes the interior of the occupant compartment. The limits are 40 fps/F_1 and 30 fps/F_2 for the longitudinal and lateral directions respectively, with F_1 and F_2 being factors of safety of unspecified value, but greater than 1.

Figure D-7 illustrates values of vehicle lateral accelerations for the series of test on the instrumented wall. Note that all acceleration values from these tests exceed the TRC 191 limit of 5 g's.

Figure D-8 is a similar chart of vehicle lateral accelerations for tests conducted on in-service railing systems. Again, note the preponderance of data falling above the 5 g's limit. Actually, all data falling below the limit are from tests with heavier vehicles for which the limit is not applicable.

Severity criteria currently proposed in the revision of TRC 191 are plotted in Figure D-9 for the series of tests on the instrumented wall. Similar data for the in-service railings are presented in Figure D-10. In all tests, the lateral rather then the longitudinal impact occurred first and was the controlling event. Note that all results even for the instrumented wall are well below the limiting value of 30 fps with a design factor of 1.0.

Injury indices determined for the NHTSA Part 572 anthropomorphic dummies from the series of tests on the instrumented wall are presented in Figures D-11 through D-14. Similar data for the in-service railing systems are presented in Figures D-15 through D-18. The reader is cautioned that the Part 572 dummy was designed to simulate human body kinematics during head-on (frontal) collisions. In side-on (lateral) collisions, the Part 572 dummy has been shown to be a poor surrogate for human body kinematics (see for example Melvin, et al. (__)). For other redirection and/or rolling) the fidelity of this dummy in reproducing human body kinematics is untrustworthy, and thought to be unreliable. The data depicted in Figures D-11 through D-18 should be read with this limitation in mind.

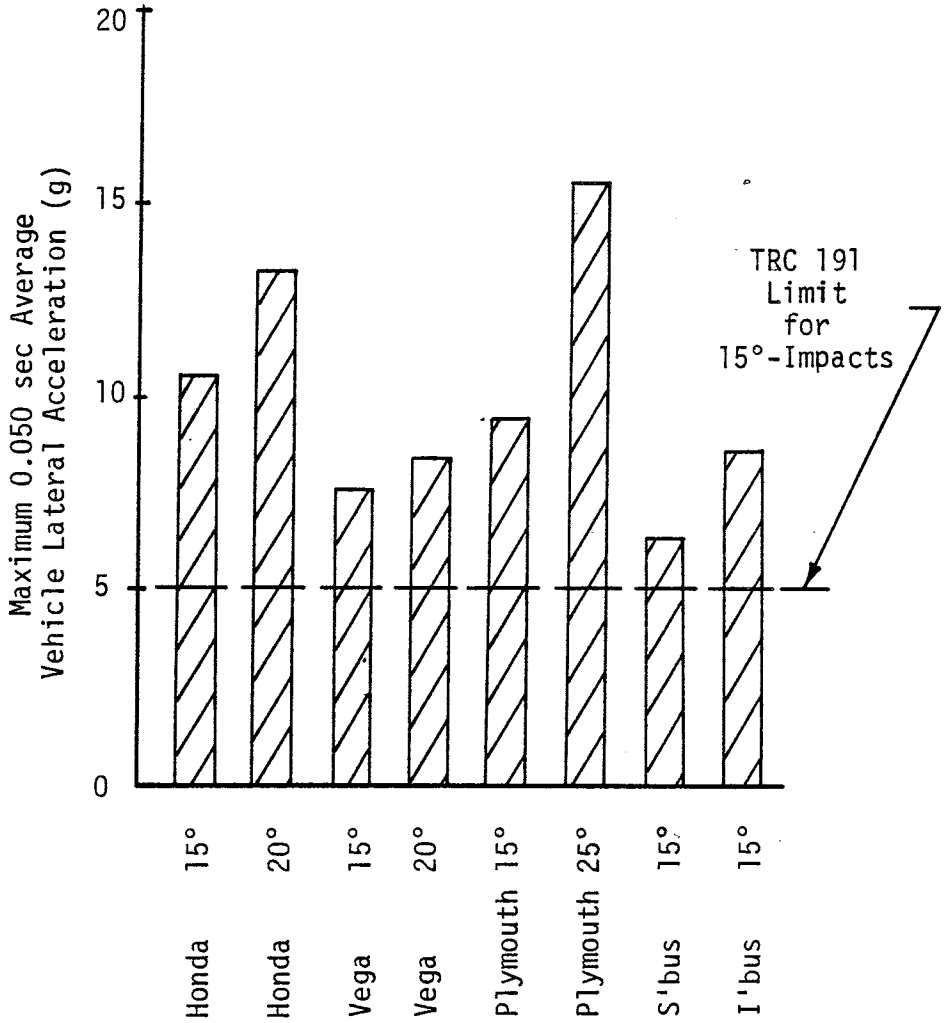

Figure D-7. Vehicle Lateral Accelerations from Tests on Instrumented Wall.

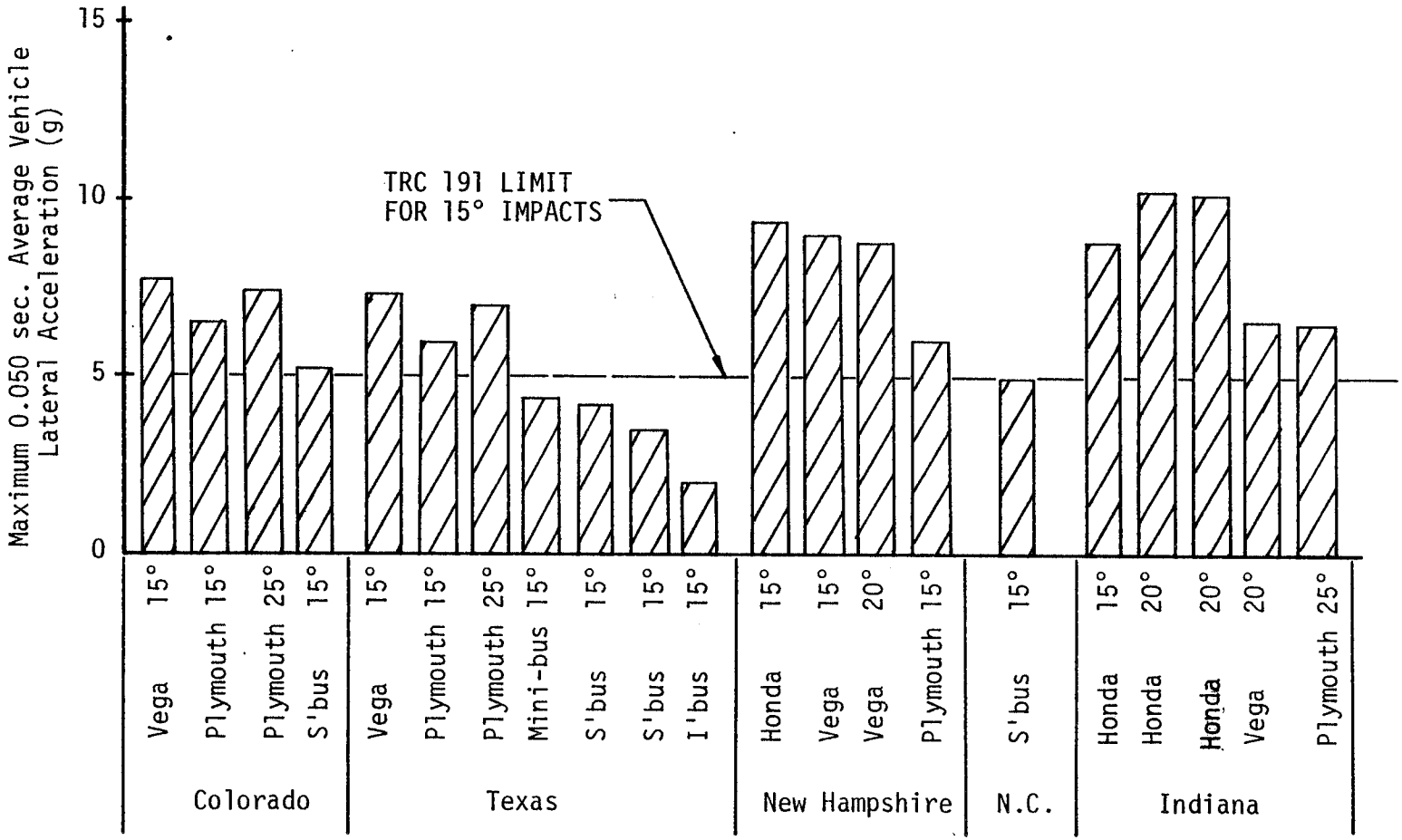

Figure D-8. Average Vehicle Lateral Accelerations for Inservice Railing Systems.

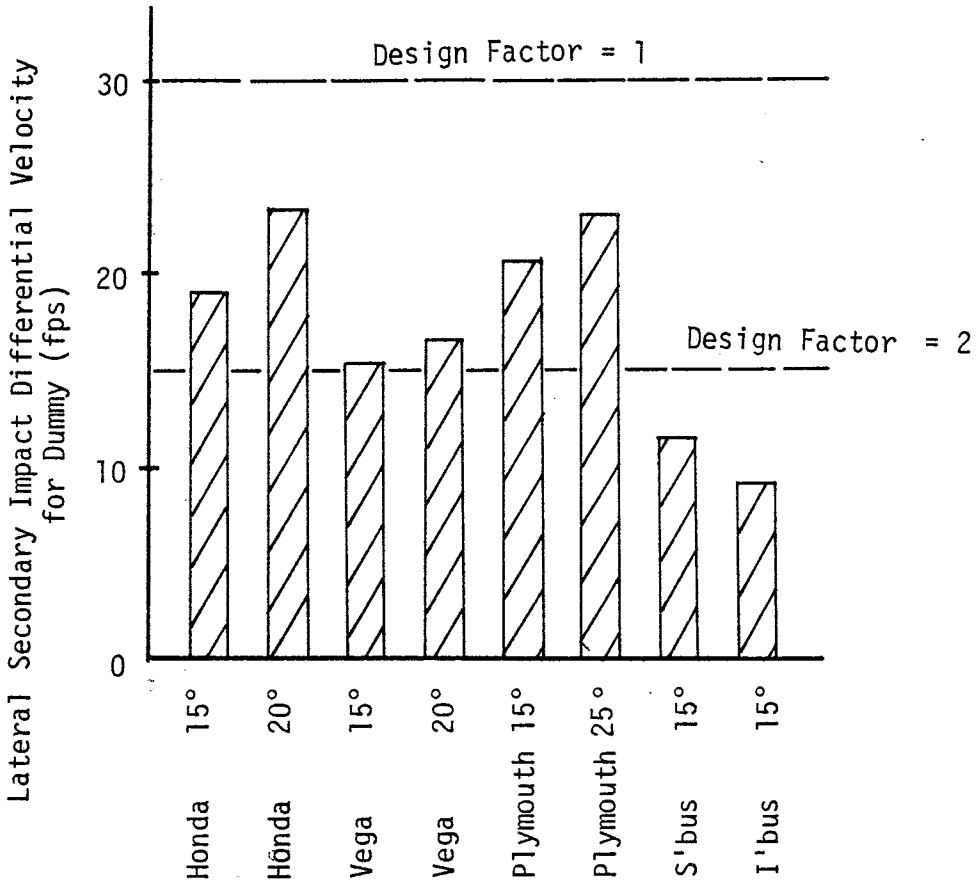

Figure D-9. Secondary Impact Differential Velocity for Dummy from Tests on Instrumented Wall.

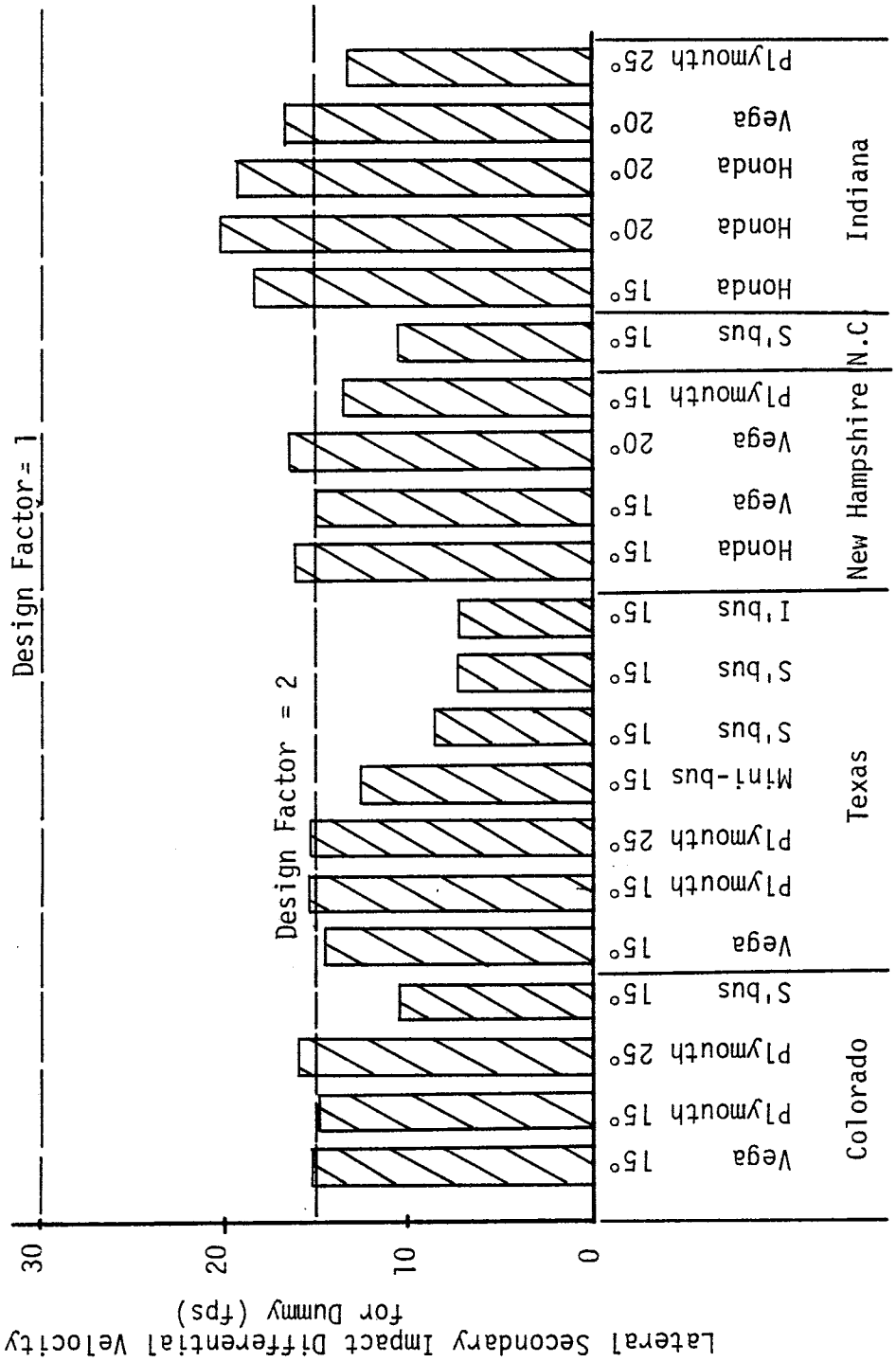

Figure D-10. Secondary Impact Differential Velocity for Dummy from Tests on Inservice Railings.

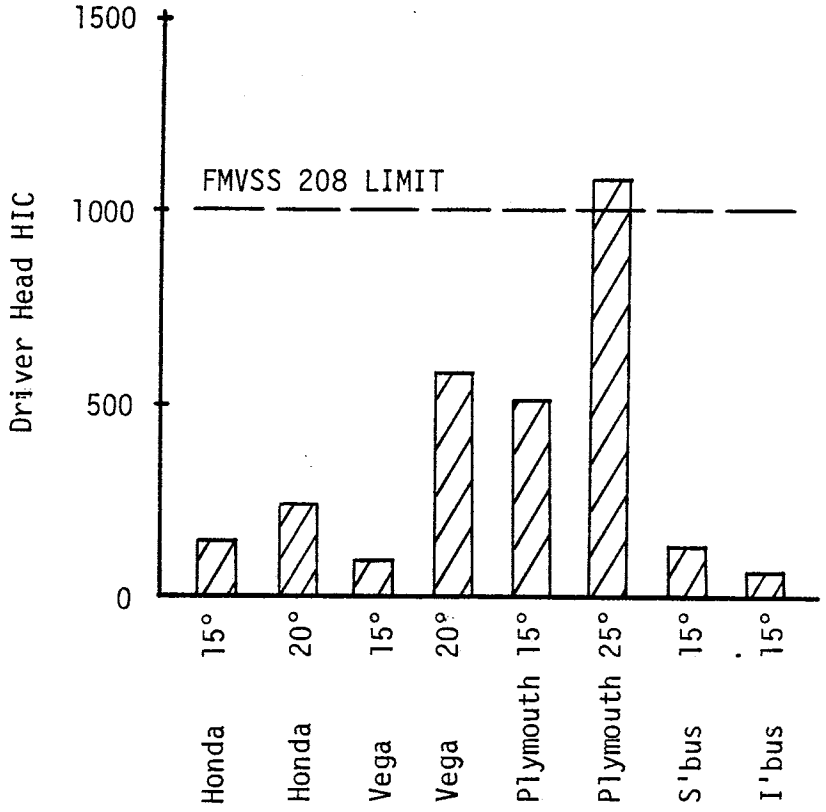

Figure D-11. Driver Head HIC from Tests on Instrumented Wall.

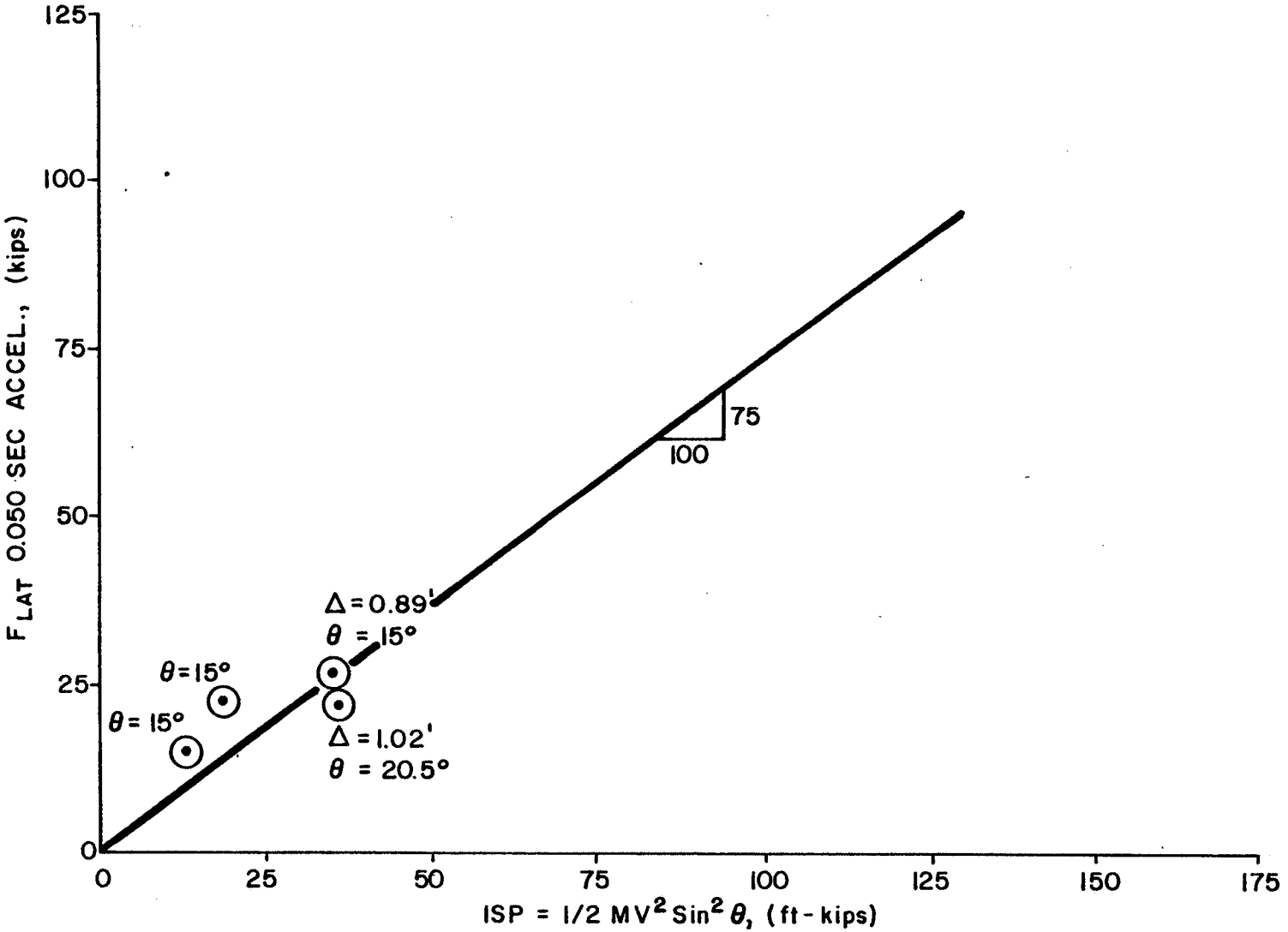

Figure E-35. Relationship between Maximum 0.050 sec Average Lateral Force and Impact Severity Potential for Tests on New Hampshire Two-Bar Aluminum Railing System.

SS-3

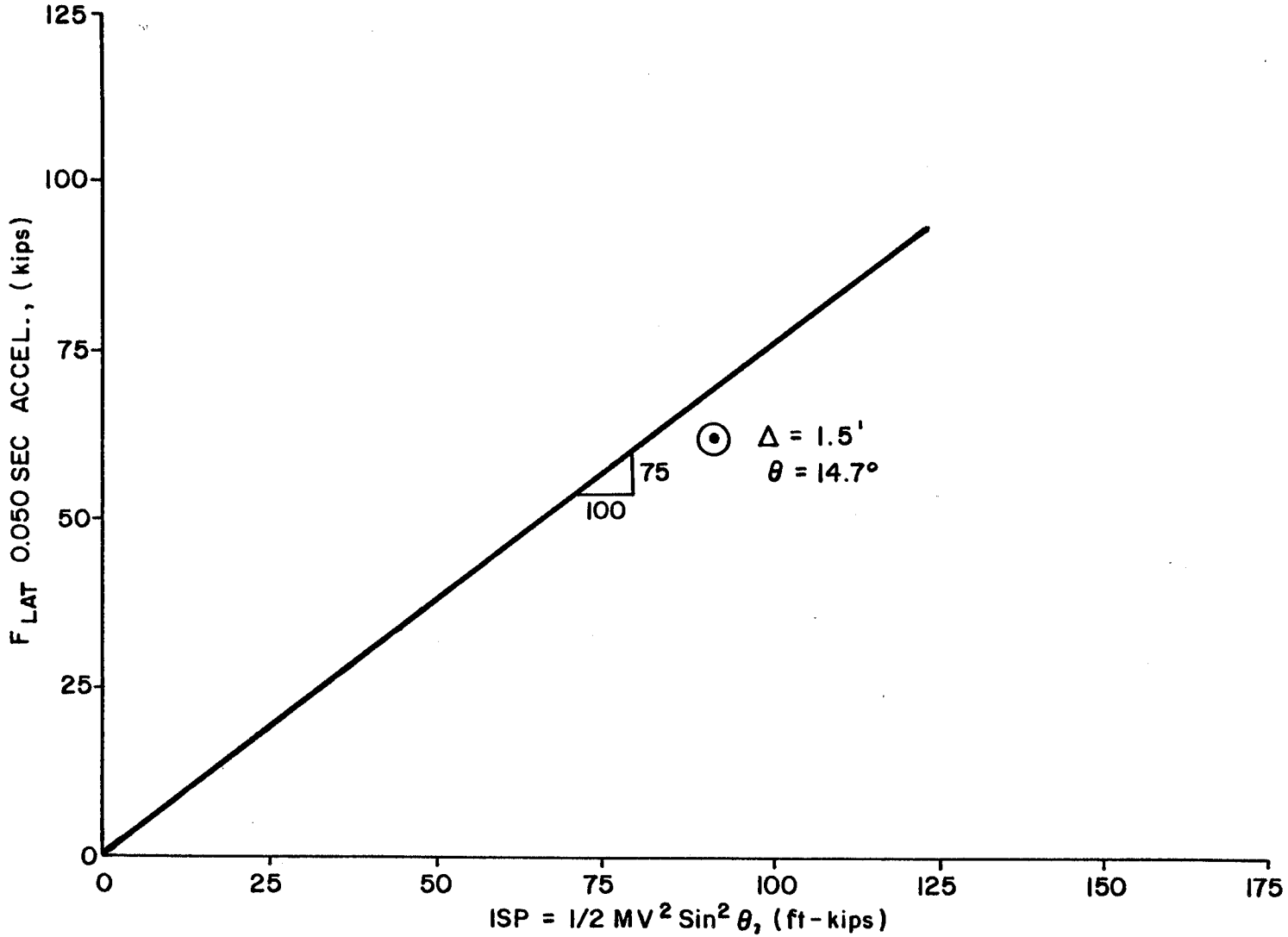

Figure E-36. Relationship between Maximum 0.050 sec Average Lateral Force and Impact Severity Potential for Tests on North Carolina Railing System.

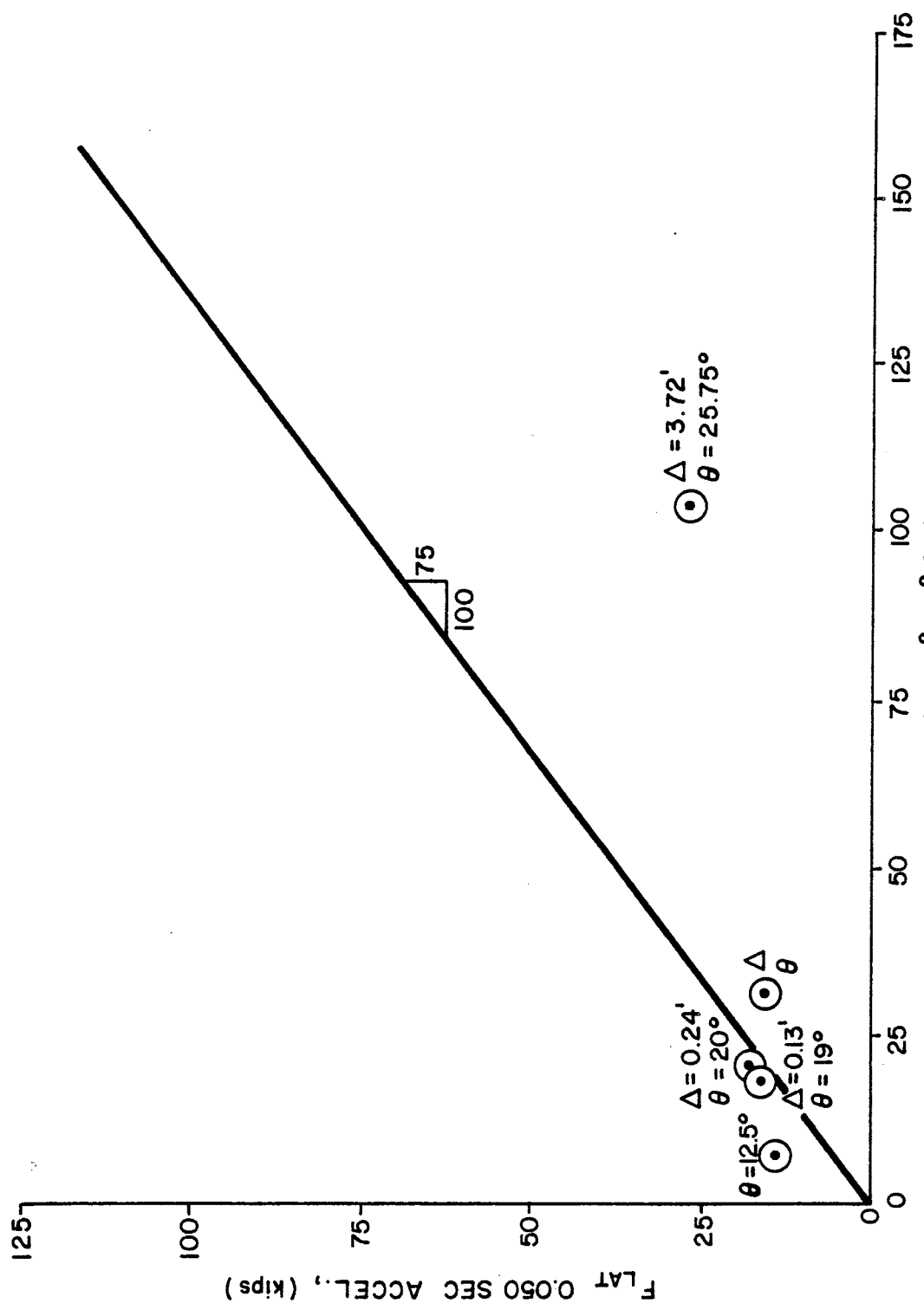

Figure E-37. Relationship between Maximum 0.050 sec Average Lateral Force and Impact Severity Potential for Tests on Indiana 5A Railing System.

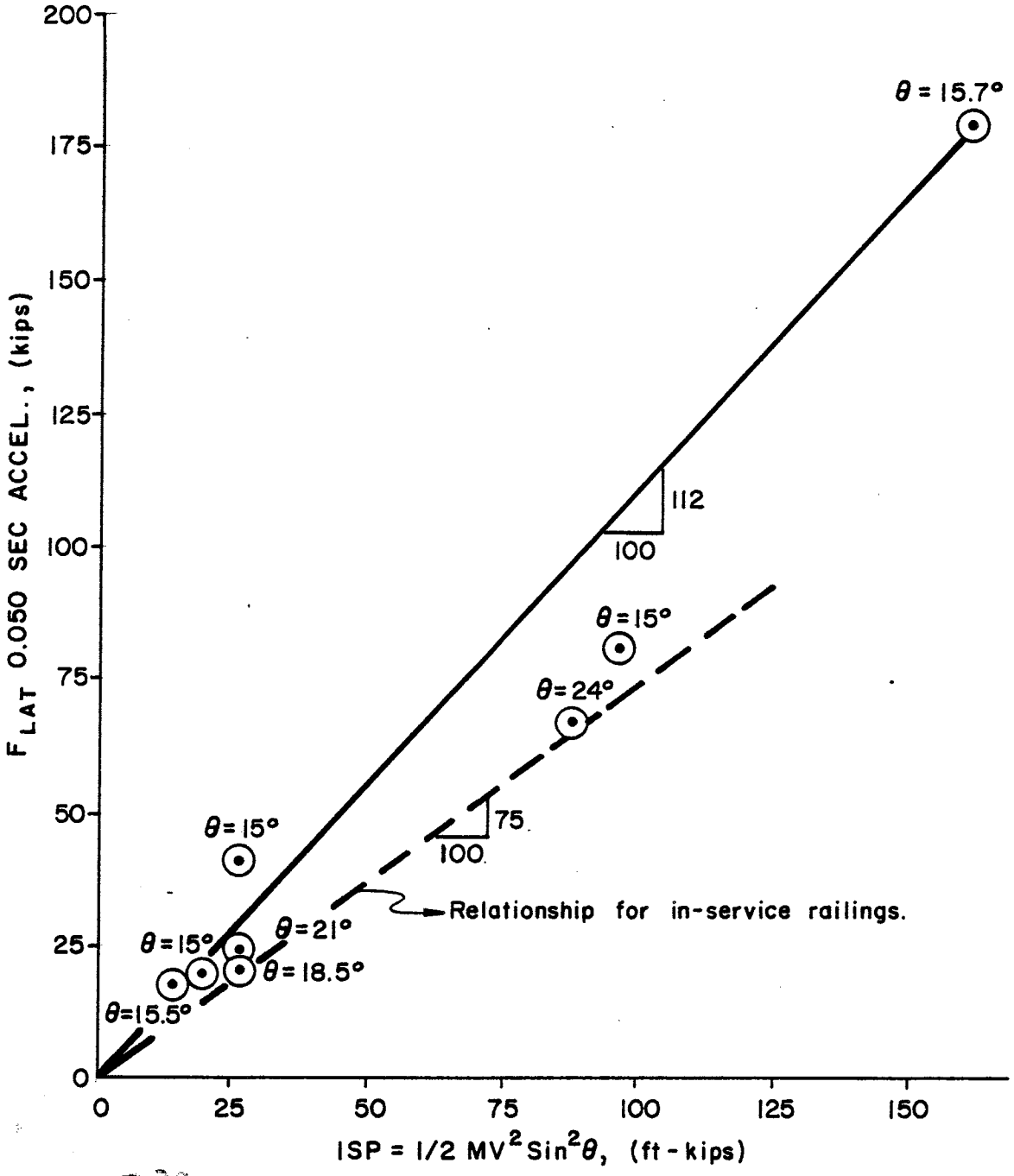

E-37

Figure . Relationship between Maximum 0.050 sec Average Lateral Force and Impact Severity Potiential for Tests on Instrumented Wall Railing System.

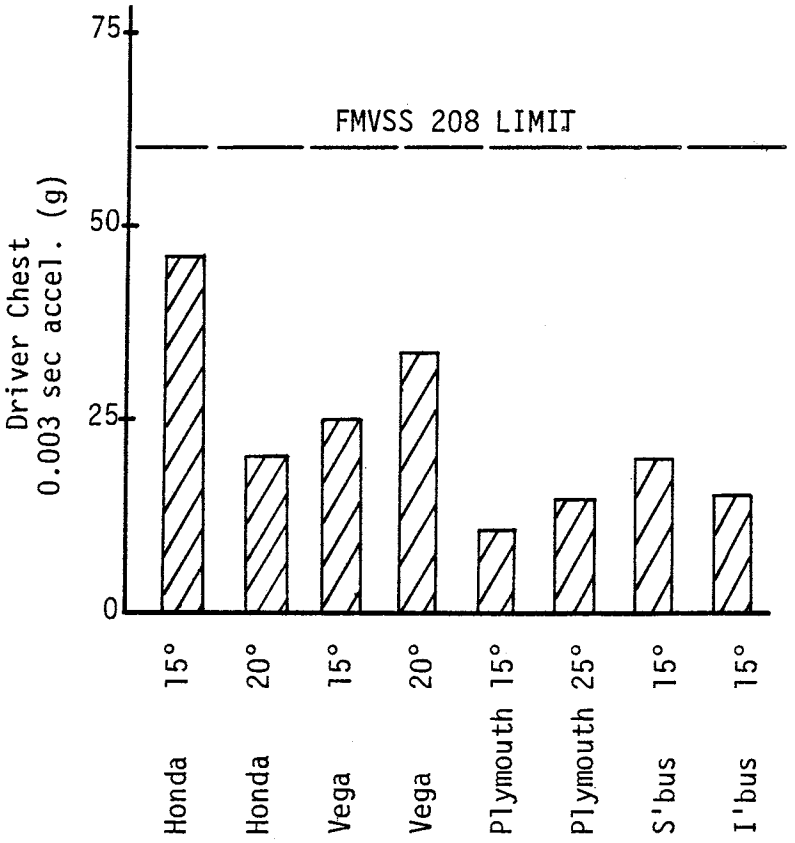

Figure D-12. Driver Chest Acceleration from Tests on Instrumented Wall.

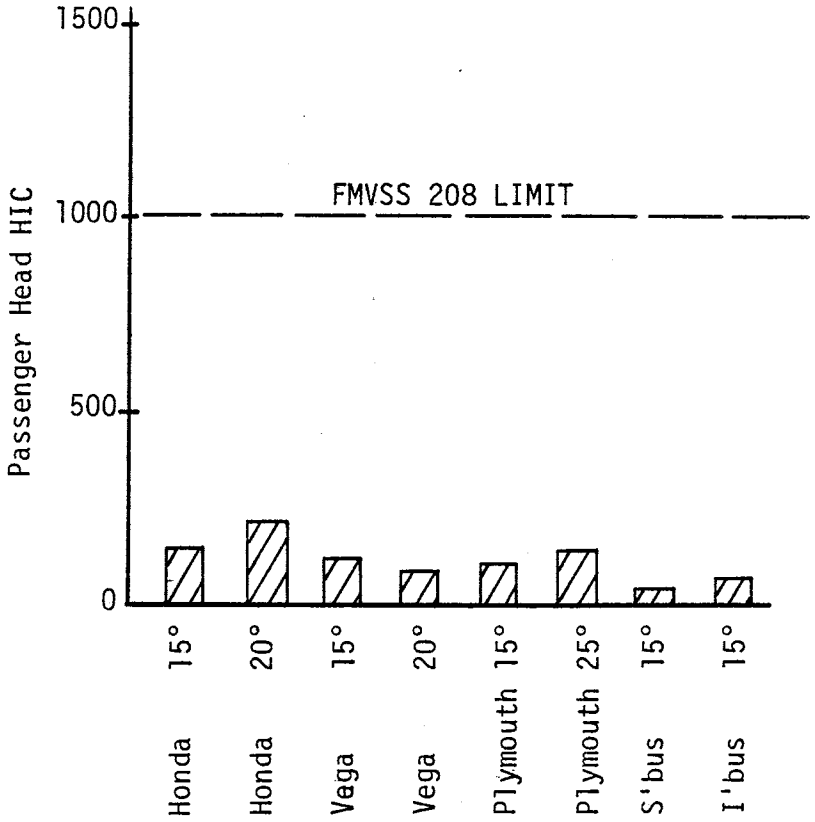

Figure D13. Passenger Head HIC from Tests on Instrumented Wall.

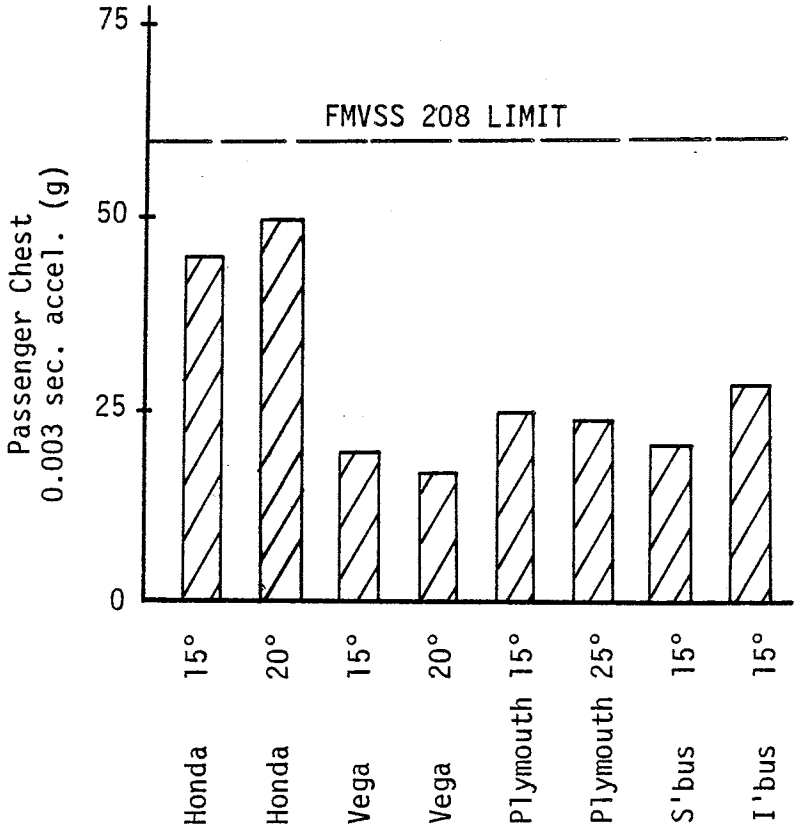

Figure D-14. Passenger Chest Acceleration from Tests on Instrumented Wall.

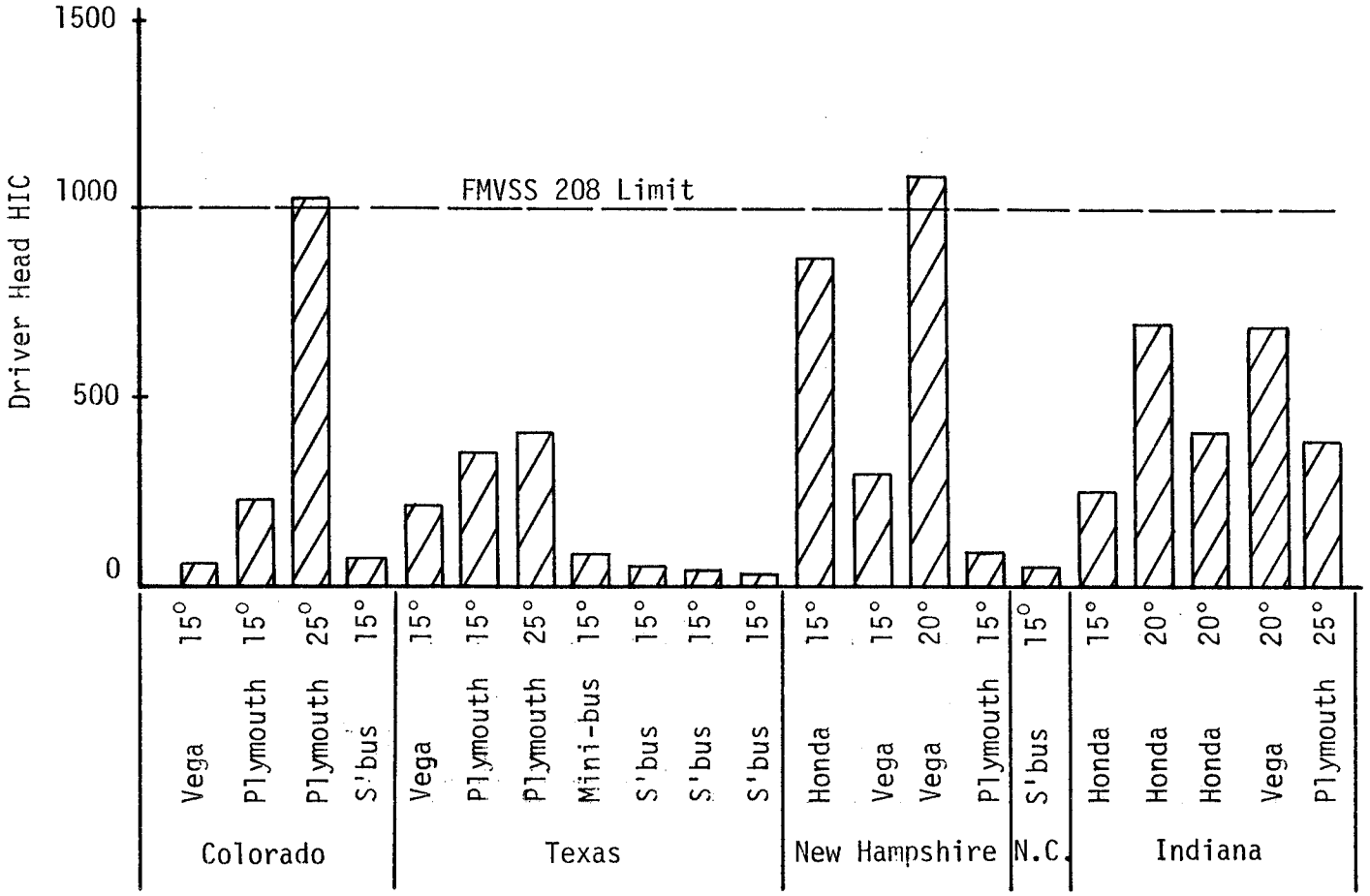

Figure D-15. Driver Head HIC from Test on Inservice Railings.

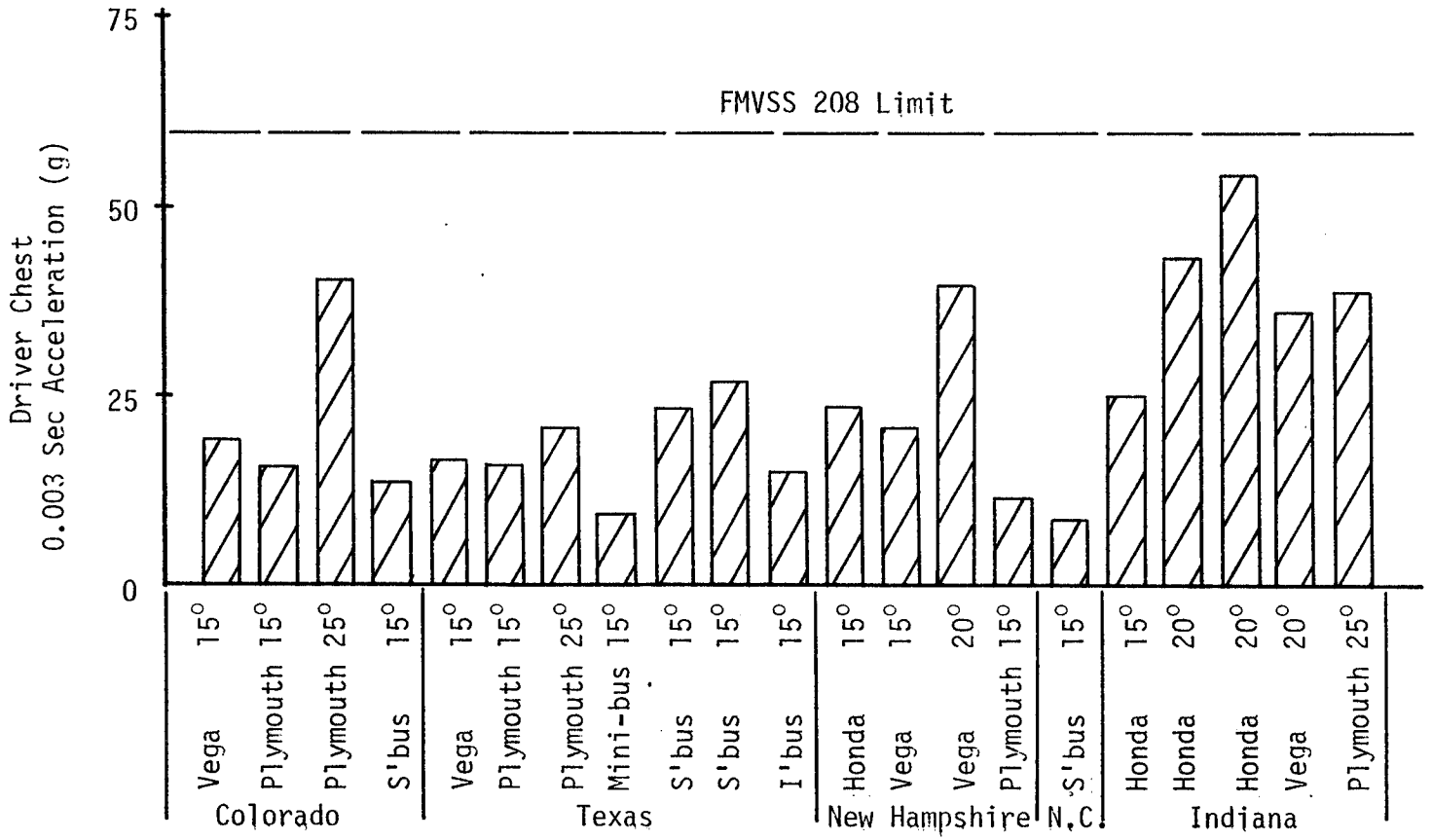

Figure D-16. Driver Chest Accleration from Tests on Inservice Railings.

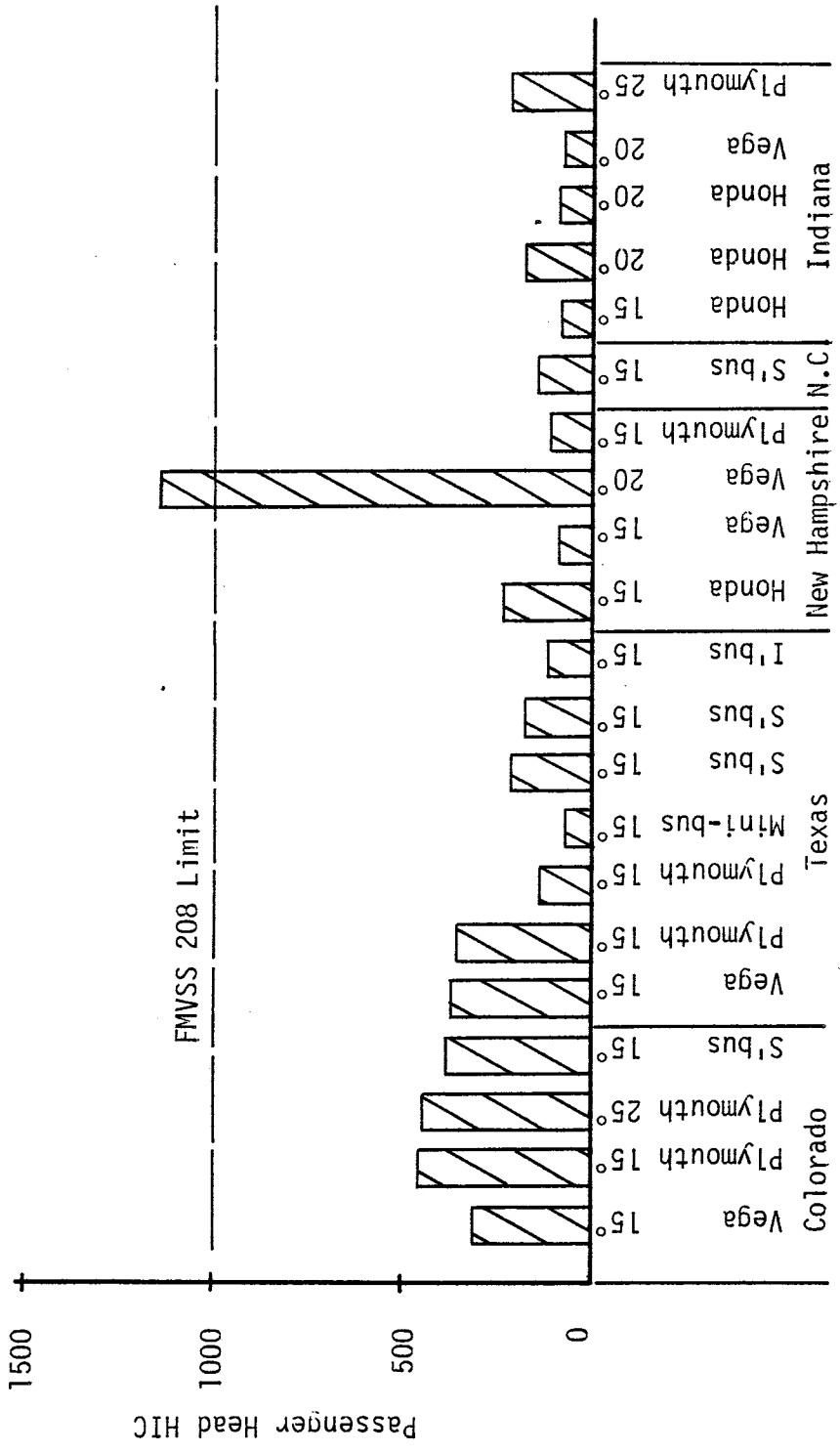

Figure D-17. Passenger Head HIC from Tests on Interservice Railings.

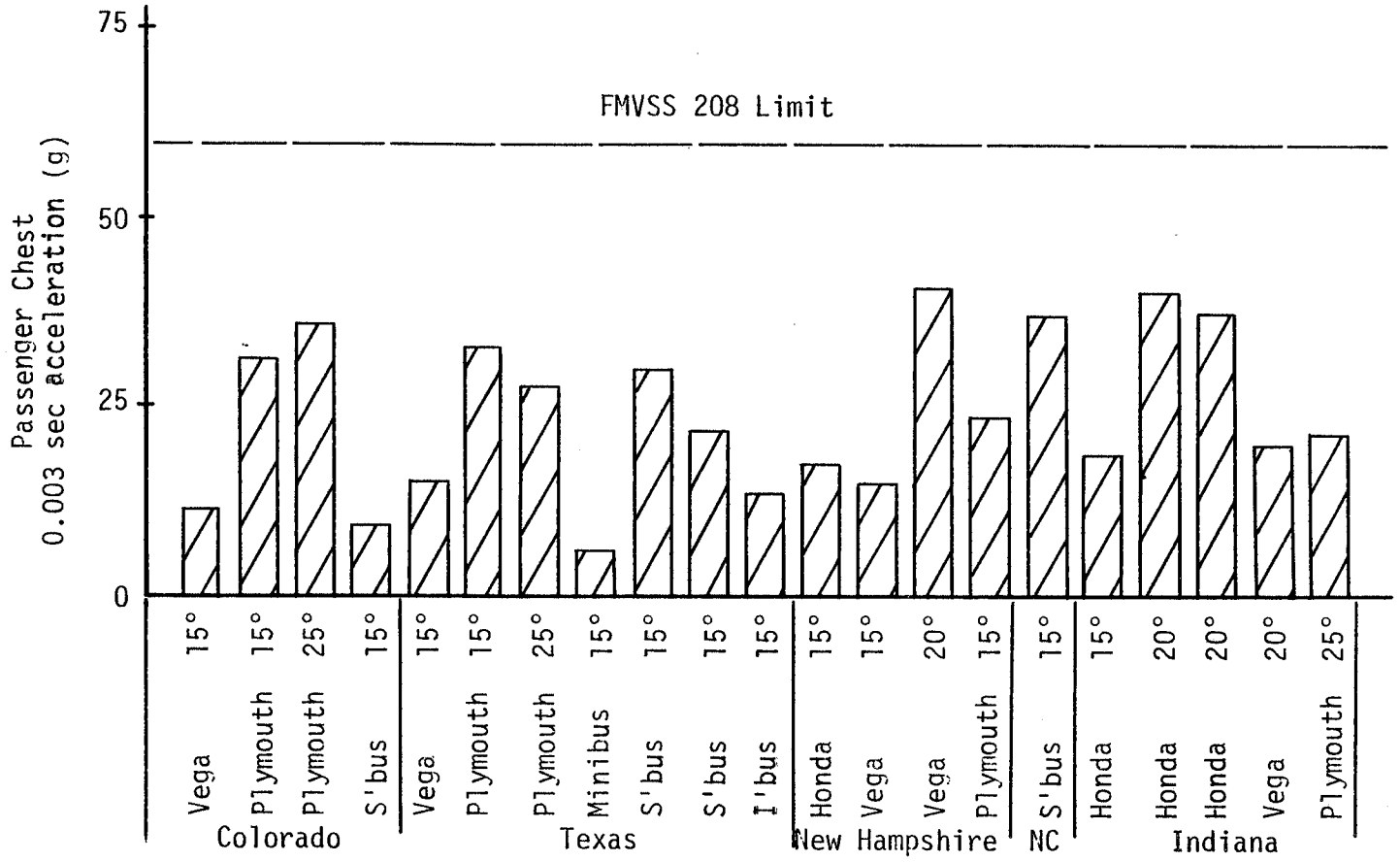

Figure 18. Passenger Chest Deceleration from Tests on Inservice Railings.

An attempt was made to correlate present injury interia with those proposed by Jarvis Michie in Draft No. 3, NCHRP Project 22-2(4), using dummy data from the present test series. In the following tabulated results, "Dummy Δv" refers to the secondary impact differential velocity experienced by the dummy between time of impact and a later time during which dummy displacement was one foot laterally or two feet longitudinally. In all cases, the one foot lateral displacemnt occurred first. Correlation coefficients were obtained from standard linear regression analysis techniques.

Present Criteria		Proposed Criteria	Correlation
Driver Head HIC	vs.	Lateral Dummy Δv	.65
Driver Chest .003 sec	vs.	Lateral Dummy Δv	.57
Passenger Head HIC	vs.	Lateral Dummy Δv	.04
Passenger Chest .003	vs.	Lateral Dummy Δv	.28
Max .050 sec Long. Accel.	vs.	Longitudinal Dummy Δv	.81
Max .050 sec Lat. Accel.	vs.	Lateral Dummy Δv	.85

Only the last two comparissions yield acceptable correlations. These relations are plotted in Figures and , along with the raw data and tolerance limits. The tolerance limit on Δv is given as 30 fps, divided by a factor of safety. With the factor of safety equal to one, all tests pass the criterion, even those which were clearly failures by any standard. Higher factors of safety were required to equalize the failure rates using the two different criteria.

We conclude that of the present criteria used to assess injury sevirity, those which depend only on vehicle dynamics corelate well with the proposed differential velocity criteria, while those that depend on the severity indices of HIC and .003 sec acceleration do not correlate.

Table D-1 . Safety Performance Evaluation. (Ref. 8)

Test Number	Time For $\Delta X = 2$ ft (sec)	ΔV_x (fps)	Time For $\Delta y = 1$ ft (sec)	ΔV_y (fps)
1	>.306	11.43	.133	15.18
2	.311	11.73	.136	14.74
3	.129	30.11	.124	16.02
4	>.653	3.30	.192	10.42
5	.438	5.19	.136	14.62
6	.570	6.15	.129	15.40
7	.219	11.93	.131	15.35
8	>.685	7.32	.161	12.47
9	.516	5.18	.231	8.64
10	.532	20.17	.266	7.54
11	.574	14.69	.268	7.43
12	.150	19.36	.121	16.20
13	.193	14.34	.135	15.00
14	.131	21.81	.123	16.43
15	.242	11.24	.146	13.65
23	.489	5.10	.194	10.31
24	.615	4.76	.109	18.34
25	.326	10.39	.118	16.91
26	.194	18.23	.153	13.81
27	.182	18.60	.103	19.46
28	.136	20.12	.100	20.28
29	>.250	9.69	.106	18.79
30	>.130	7.25	.130	15.20
31	>.250	8.20	.120	16.55
32	.329	7.89	.099	20.22
33	--	--	--	--
34	.546	6.17	.176	11.38
35	>.700	3.87	.219	9.15
36	.189	10.89	.088	23.00
37	.236	12.26	.085	23.47

The first and most important requirement of a bridge railing is to contain and smoothly redirect the selected spectrum of design vehicles. The selected spectrum of vehicles will be a function of the field installation site and the design level of service. This report makes no attempt to define a selected spectrum of vehicles nor does it set forth a procedure for doing so.

It is recommended that all bridge railing systems be required to meet full-scale performance tests with some exceptions being allowed. The exceptions would be for the design of railing systems to accomodate the current spectrum of automobiles when convention materials and design procedures are followed and when the recommended design guidelines are very carefully followed. It is further recommended that testing and evaluation of railings be performed in accordance with the final draft of the report on NCHRP Study 22-2(4).

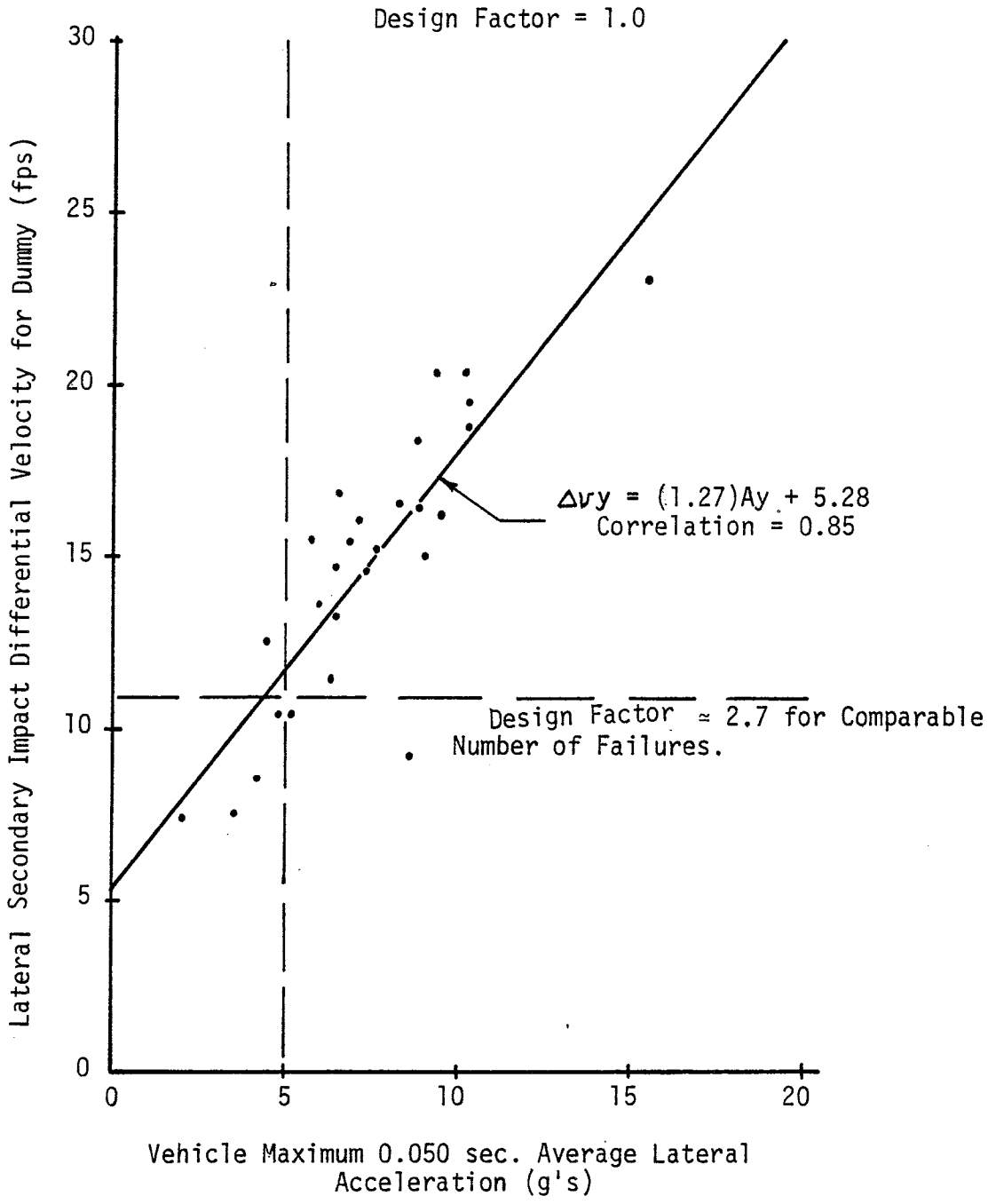

Figure D-19. Relationship between Secondary Impact Differential Velocity for Dummy and Vehicle Center of Gravity Lateral Acceleration.

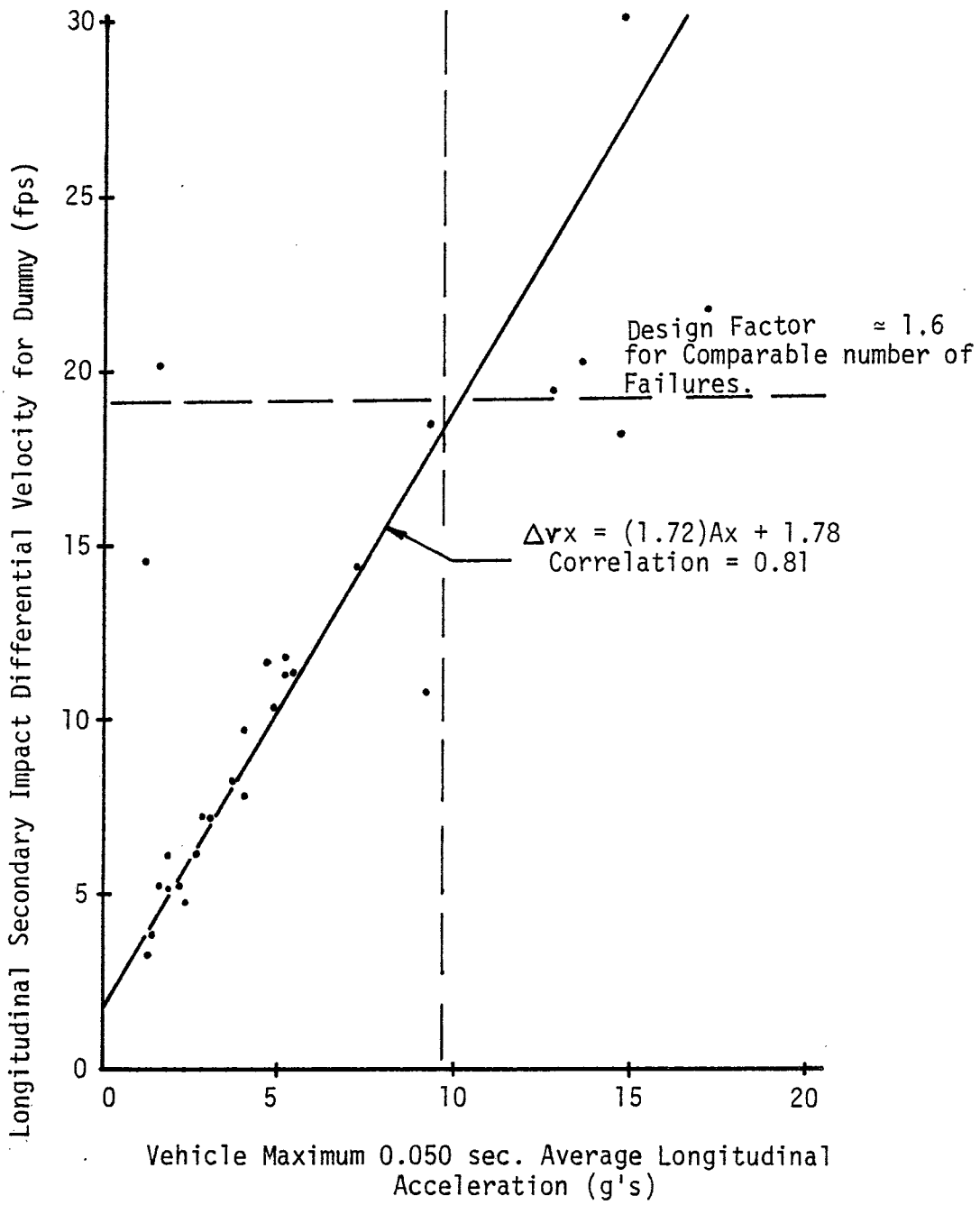

Figure D-20. Relationship between Secondary Impact Differential Velocity for Dummy and Vehicle Center of Gravity Longitudinal Acceleration.

Baseline Performance from Instrumented Wall

A quantitative measure of snagging was developed using data from the instrumented wall as a baseline measure and is presented in Figure D-20-a. Highest 0.050 sec average longitudinal vehicle acceleration values for the test on in-service railings are plotted against the same parameter for corresponding tests on the instrumented wall and a line of equality is shown. In the instrumented wall tests, snagging did not occur and the longitudinal acceleration values are primarily the result of impact angle, vehicle properties, and friction on the wall. Longitudinal accelerations, from tests on in-service railings, that are higher than those from the instrumented wall indicate some degree of snagging and a relationship such as the line of equality can be used to quantify an acceptable level of snagging.

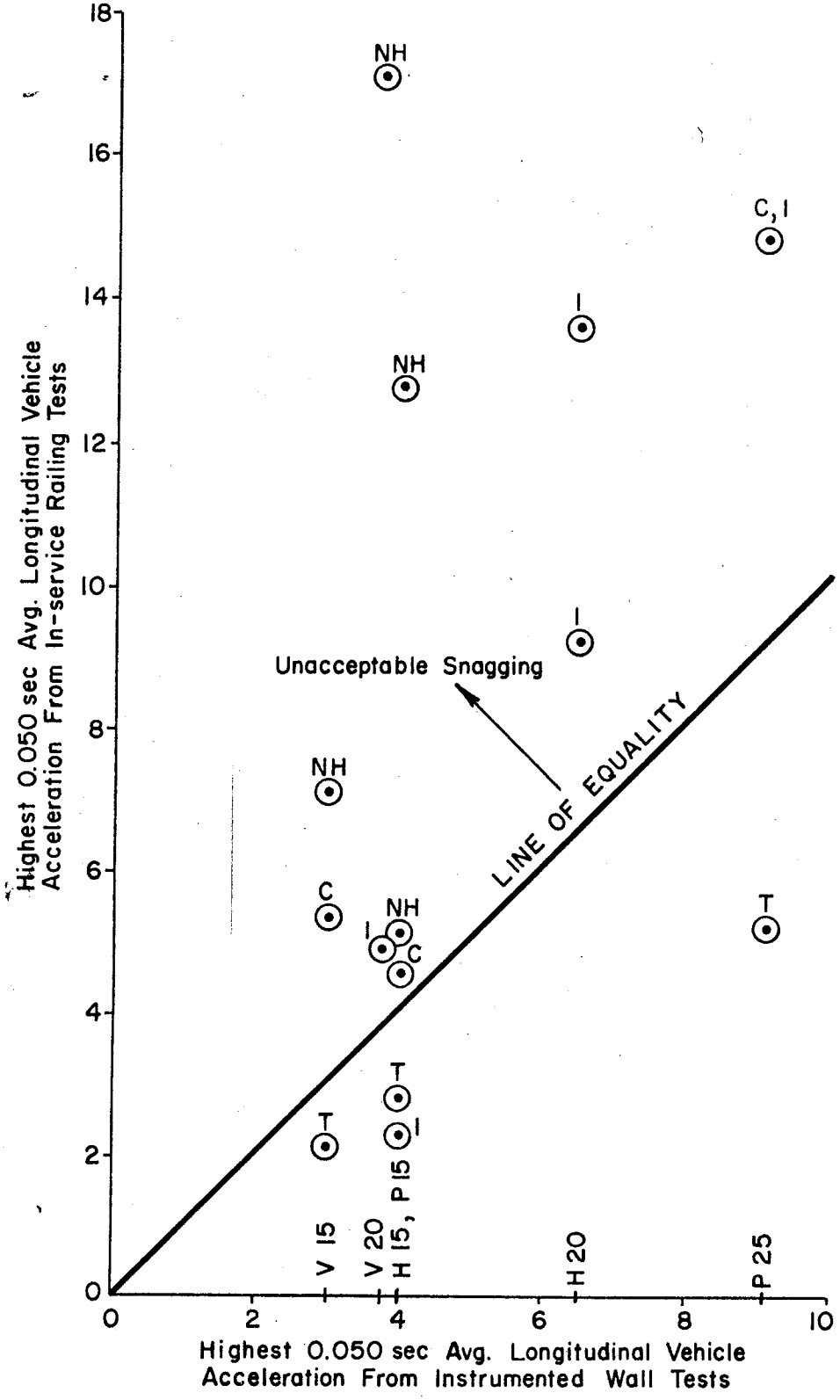

Figure D-20-a. Quantification of Snagging.

Evaluation of Performance Standards

In addition to defining appropriate performance standards for bridge rail designs, a search of the literature was made to find test records for comparison with the recommended standards. It was hoped that test results from a spectrum of bridge rail designs spanning a range of design sophistication could be found.

The search resulted in a "shopping list" from which representatives of the Federal Highway Administration chose four. These included the Safety Shape, Tubular Thrie-Beam on Tubes, Collapsing Ring, and Low Service Level Thrie Beam. All of the available test records on these representative bridge rail designs were collected and summarized and recast to contrast with the newly formulated performance standards.

In the selection process, various features of the candidate railing systems were studied and described in order to document the reasoning that led to the recommended designs.

Safety Shape: This design is very popular and in wide-spread use, both as a bridge railing and as a median barrier (Figure D-21). It offers significant advantage in better distribution of loads into the deck. Lateral loads can be distributed over long portions of the deck and as a result their intensity is reduced. It is relatively low in cost and has demonstrated excellent performance in intermediate ranges of vehicles-speeds-angles. Stability of small vehicles after impacts with the safety shape is poor and that for large vehicles is not yet well known. Visibility is limited with this design. Strength of the system depends upon steel reinforcement provided and other design details.

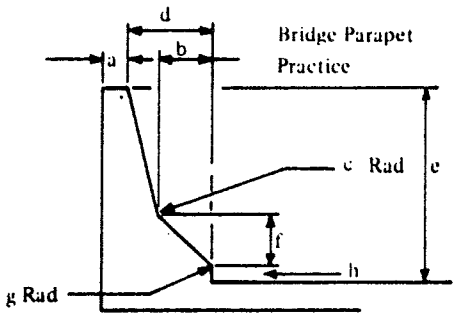

D-21.
Figure ~~4~~. Safety Shape.

It can be designed to have a rather high strength. Since there are many miles of this system in place today and since it is being used in new construction in many states, it should be included as one of the systems to be evaluated against the performance standards.

Tubular Thrie-Beam on Tubes: This is a retrofit design developed by Southwest Research Institute. It incorporates 6-in. diameter thin wall tubes for energy absorbers (Figure D-22). Tests with automobiles have been conducted and good performance was obtained. However, automobile lateral accelerations were higher than those presently allowed by Transportation Research Circular 191.

Collapsing Ring: An extensive series of full-scale crash tests has been conducted on this railing design. As shown in Figure D-23, the design is relatively intricate. Test vehicles ranged from a 2,090-lb VW Sedan to a 40,000-lb intercity bus and a 40,000-lb tractor/trailer. This railing system has very good performance for a wide range of vehicle sizes and test conditions. However, it is very costly and has met with resistance in implementation efforts. It would be best suited for installation sites where a rather high level of service is needed and can be afforded.

Low Service Level Thrie-Beam: This design was also developed by Southwest Research Institute. It consists of a thrie-beam mounted on either wood or steel posts. The posts are side-mounted on the deck (Figure D-24). The design is for service level 1 which requires a structural adequacy test with a 4,500-lb automobile at 60 mph and 13 deg. This test and a test with a 2,250-lb automobile at 60 mph and

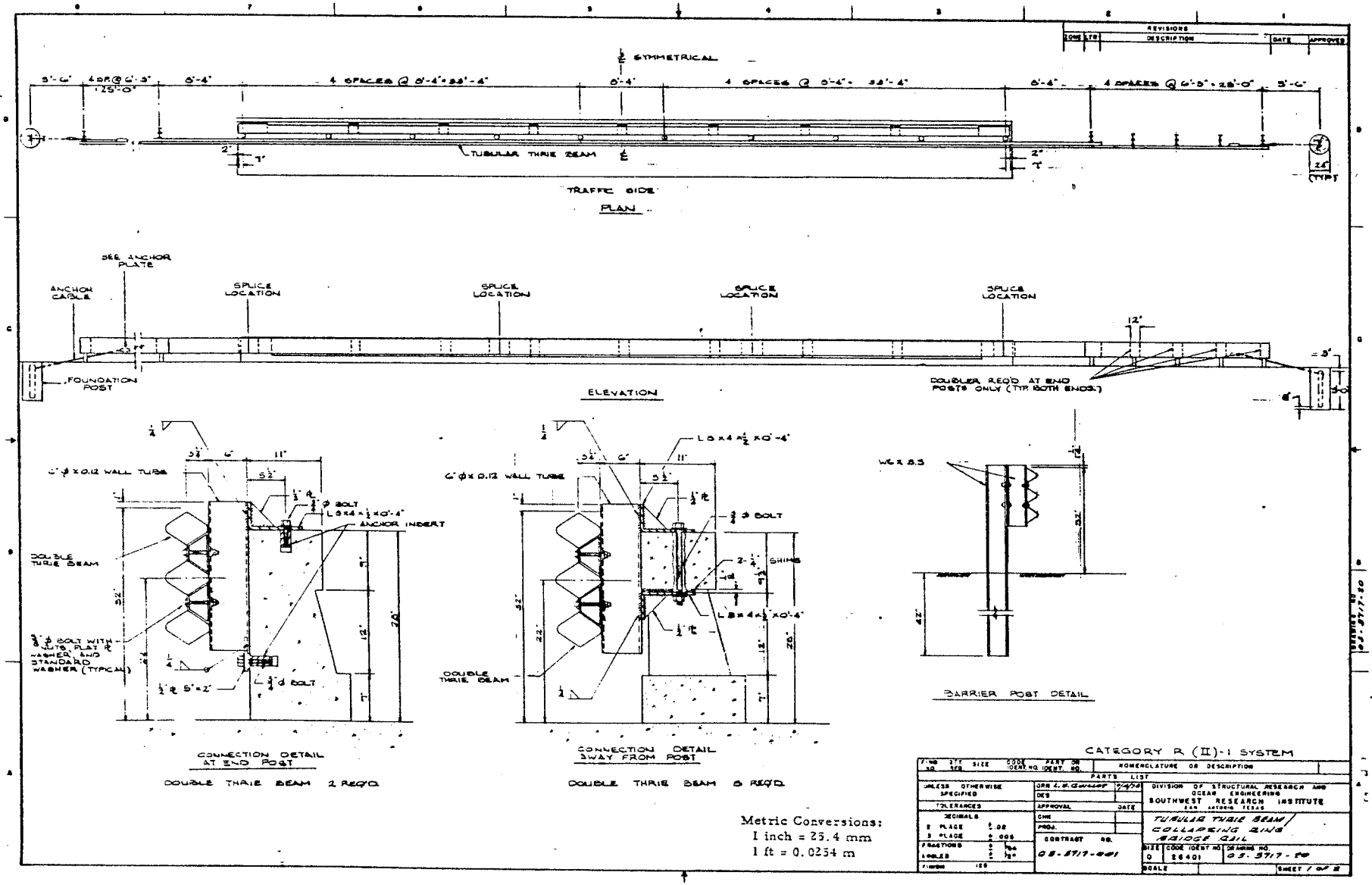

D-22

Figure 6. Tubular Thrie Beam on Tubes

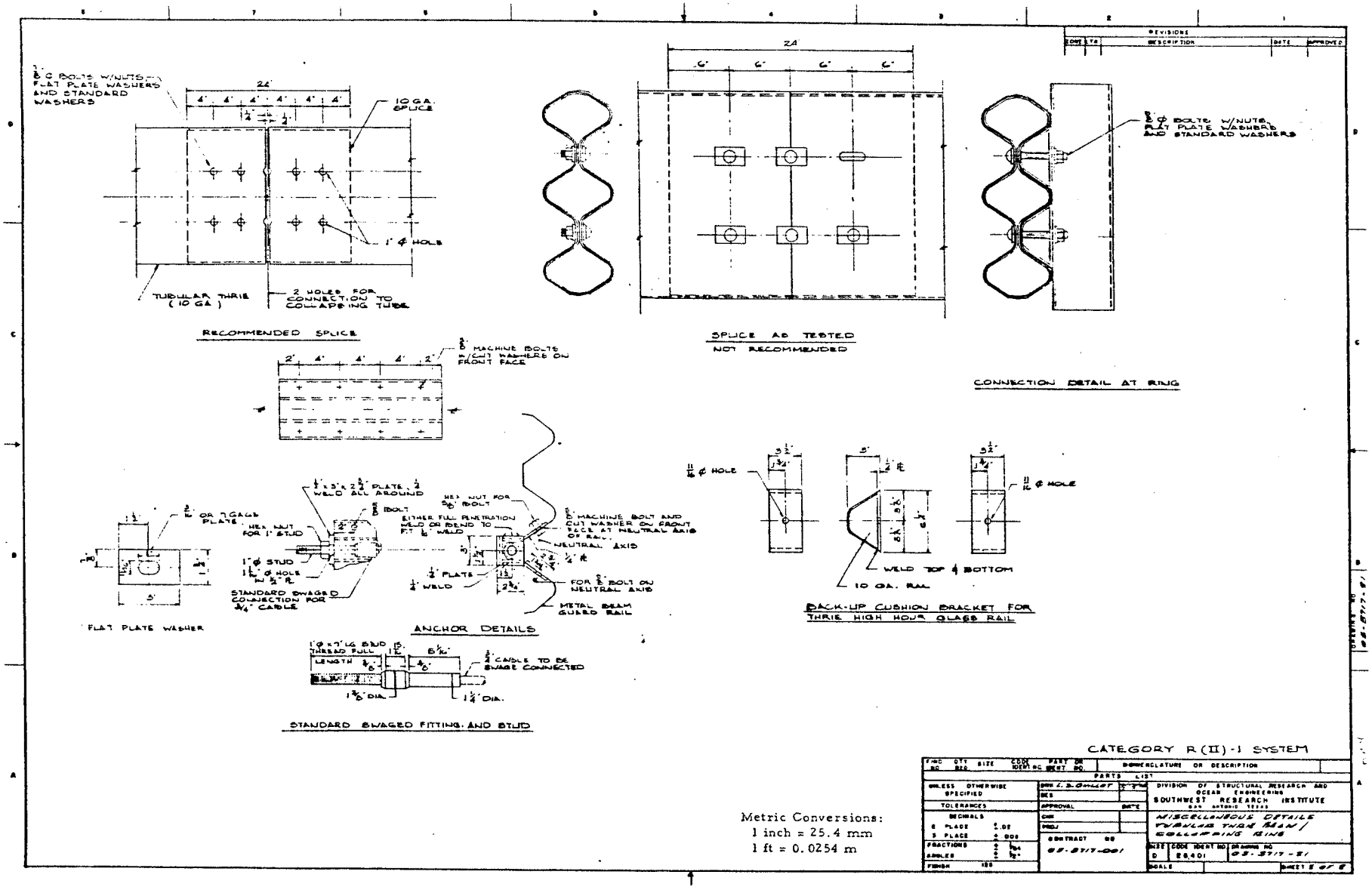

D-35

D-22

Figure 6. Tubular Thrie Beam on Tubes (Continued)

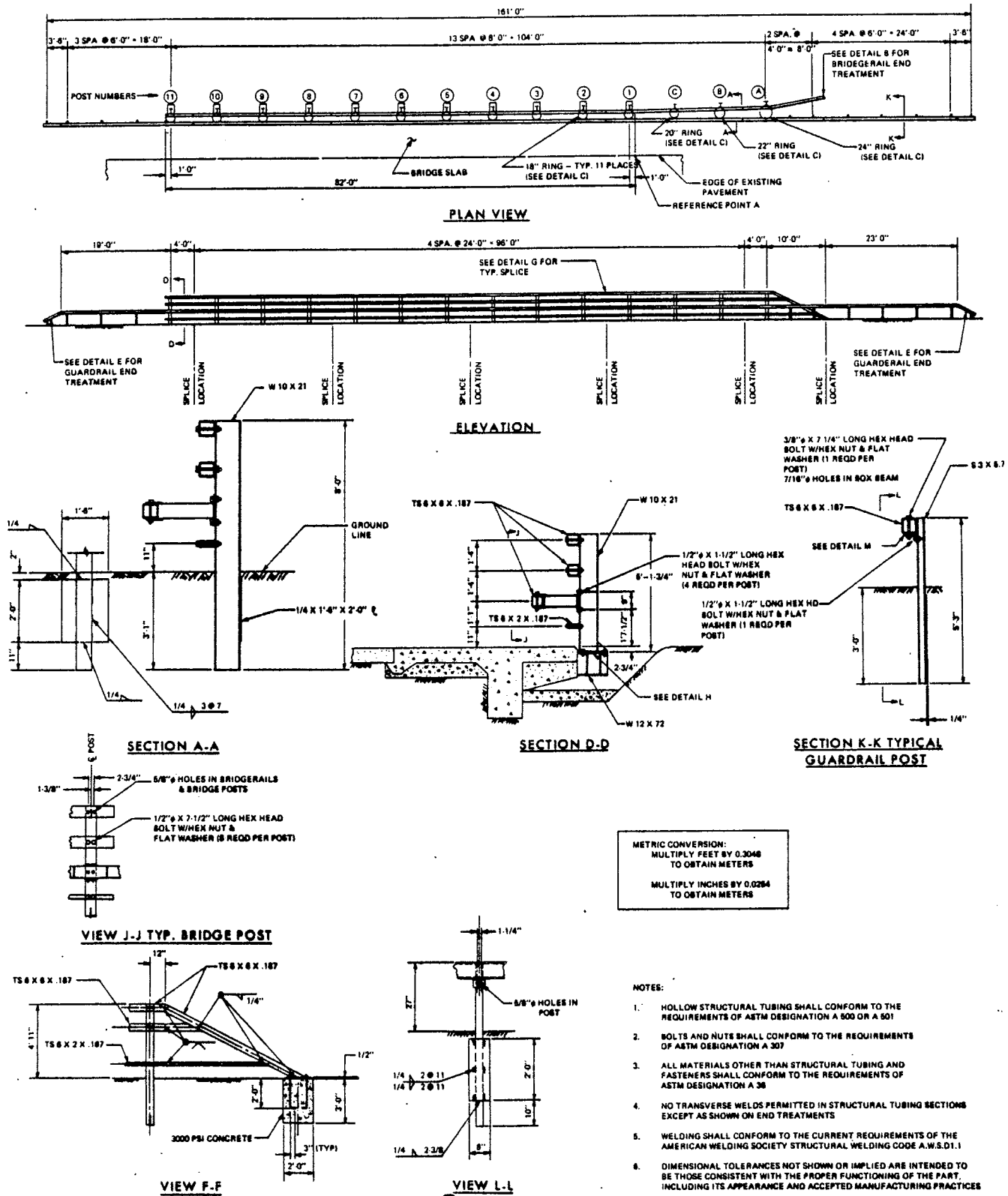

NOTES:

1. HOLLOW STRUCTURAL TUBING SHALL CONFORM TO THE REQUIREMENTS OF ASTM DESIGNATION A 500 OR A 501
2. BOLTS AND NUTS SHALL CONFORM TO THE REQUIREMENTS OF ASTM DESIGNATION A 307
3. ALL MATERIALS OTHER THAN STRUCTURAL TUBING AND FASTENERS SHALL CONFORM TO THE REQUIREMENTS OF ASTM DESIGNATION A 36
4. NO TRANSVERSE WELDS PERMITTED IN STRUCTURAL TUBING SECTIONS EXCEPT AS SHOWN ON END TREATMENTS
5. WELDING SHALL CONFORM TO THE CURRENT REQUIREMENTS OF THE AMERICAN WELDING SOCIETY STRUCTURAL WELDING CODE A.W.S.D1.1
6. DIMENSIONAL TOLERANCES NOT SHOWN OR IMPLIED ARE INTENDED TO BE THOSE CONSISTENT WITH THE PROPER FUNCTIONING OF THE PART, INCLUDING ITS APPEARANCE AND ACCEPTED MANUFACTURING PRACTICES

D-23

FIGURE 3. COLLAPSING RING BRIDGERAIL SYSTEM

D-36

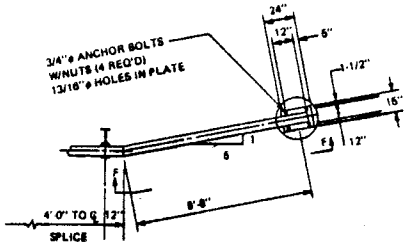

DETAIL B-BRIDGERAIL END TREATMENT

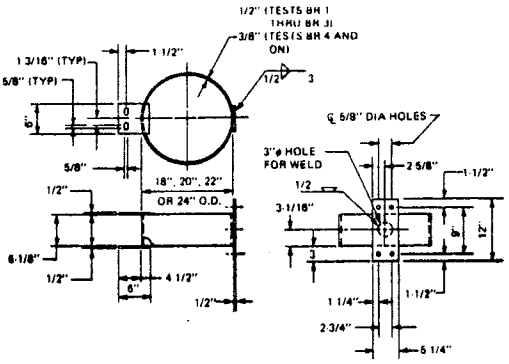

DETAIL C - RING

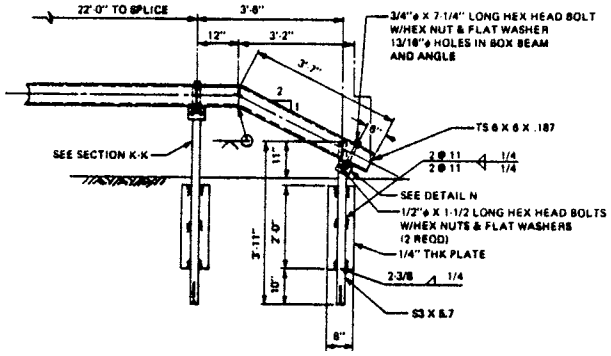

DETAIL E - GUARDRAIL END TREATMENT

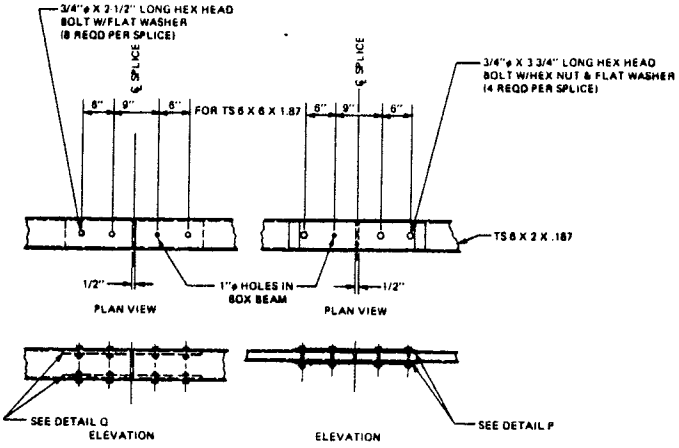

DETAIL G - TYP SPLICE JOINTS

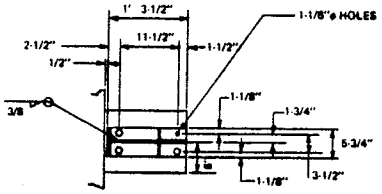

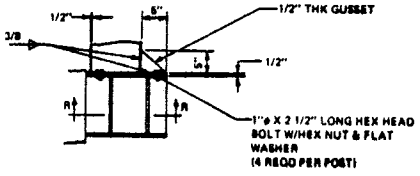

DETAIL H

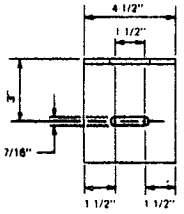

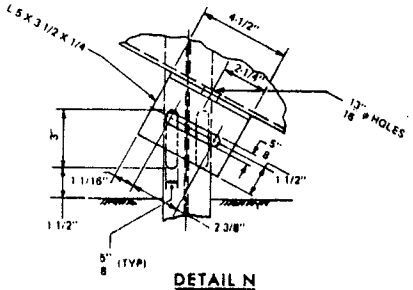

DETAIL N

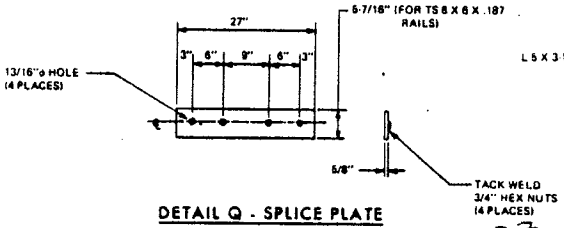

DETAIL Q - SPLICE PLATE

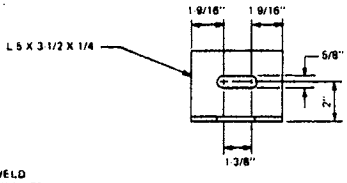

DETAIL M - ANGLE

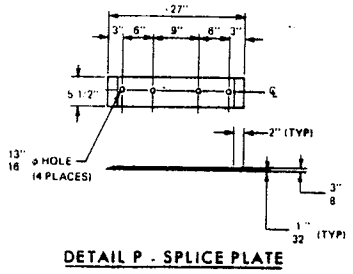

DETAIL P - SPLICE PLATE

D-23

FIGURE 3. COLLAPSING RING BRIDGERAIL SYSTEM
(continued)

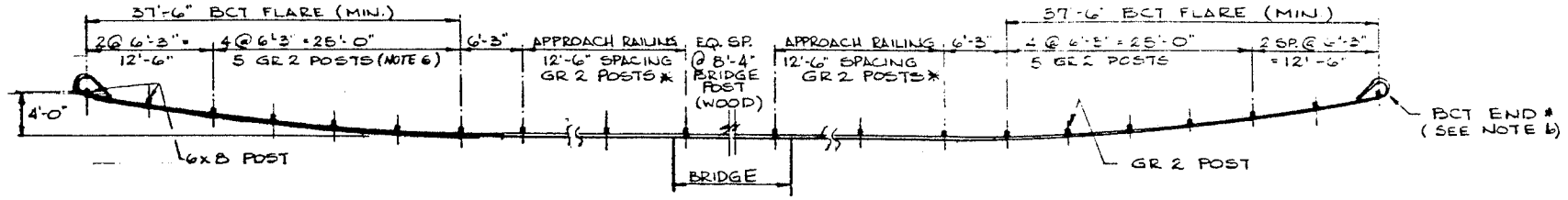

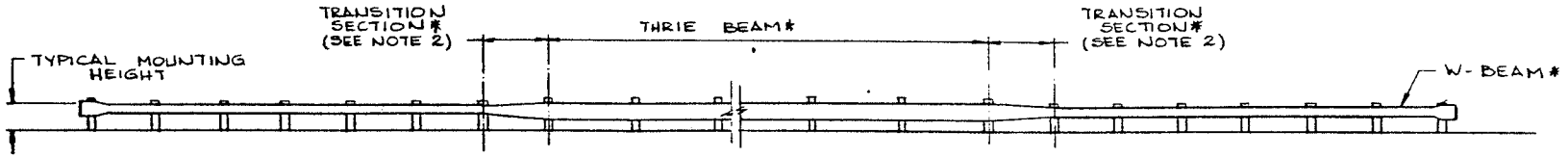

ELEVATION VIEW
SCALE: 1/8" = 1'-0"

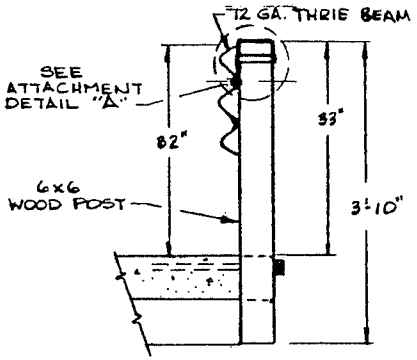

TYP BR. RAILING (N.T.S.)

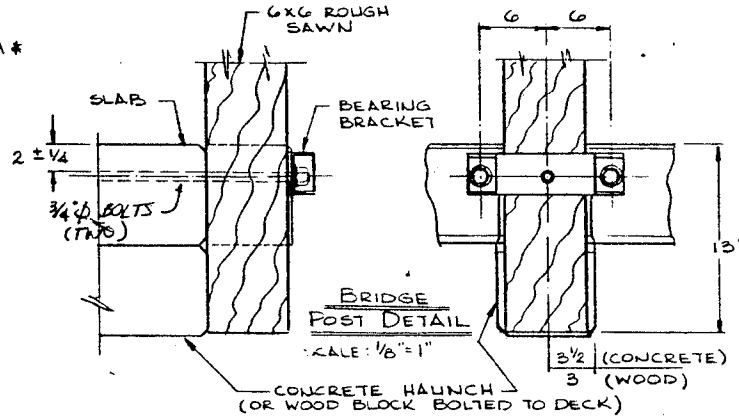

BRIDGE POST DETAIL
SCALE: 1/8" = 1"

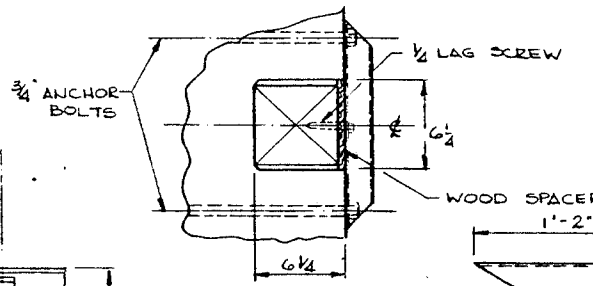

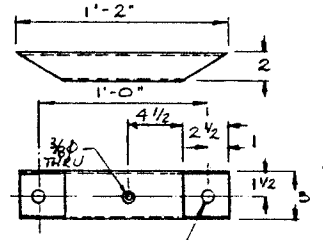

BEARING BRACKET (SCALE: 1/6)
(TS 2x3 x 0.188)

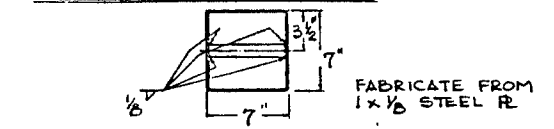

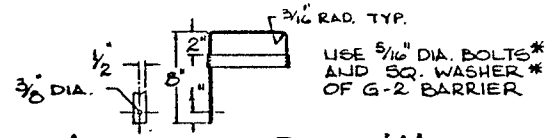

ATTACHMENT DETAIL "A"

NOTES:

1. Components with asterisk can be found in the latest Guide to Standardized Highway Barrier Hardware, published by American Road and Transportation Builders Association, 525 School St.,SW, Wash., D.C. Length of GR2 posts used in approach railing should be increased by 8 in. to accommodate additional depth of Thrie beam.
2. Thrie beam and W-beam material and hardware are specified in AASHTO M180-78.
3. Unless otherwise noted bolts shall conform to requirements of ASTM A307 and nuts to requirements of ASTM A563, Grade A or better. Other bolts shall conform to the requirements of ASTM A325 and nuts to the requirements of ASTM A563, Grade C or better. All nuts and bolts shall be galvanized in accordance with ASTM A153.
4. Deck anchorage of the post assembly shall be provided by applying a 10-kip (45-kN) force to the post at 22 in. (550 mm) above the deck and designed according to the latest AASHTO bridge specification.
5. Steel shall conform to requirements of ASTM A-36 or equivalent and be galvanized according to ASTM A123.
6. BCT guardrail terminal details are specified in NCHRP Research Results Digest 102 or later revision. Other approach railing details are shown in 1977 AASHTO Guide for Selecting, Locating and Designing Traffic Barriers or latest version.
7. Structural tubing shall conform to the requirements of ASTM A500, Grade B or ASTM A501 and be galvanized in accordance with the requirements of ASTM A123.
8. Posts shall be grade stamped Douglas Fir No. 1 grade or Southern Pine, Grade No. 2SR or better (F_b = 1100 psi min). Grading shall be in accordance with the West Coast Lumber Inspection Bureau, Southern Pine Inspection Bureau, or other appropriate association. Posts are rough sawn or S4S with a dimensional tolerance of +1/4" as shown on drawing. All timber shall receive a preservative treatment in accordance with AASHTO Designation M-133.

D-24.

Figure 7. Low Service Level Thrie Beam.

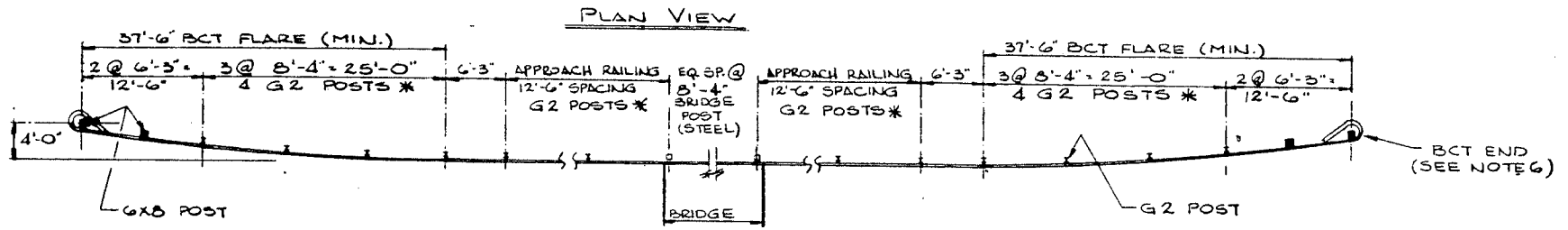

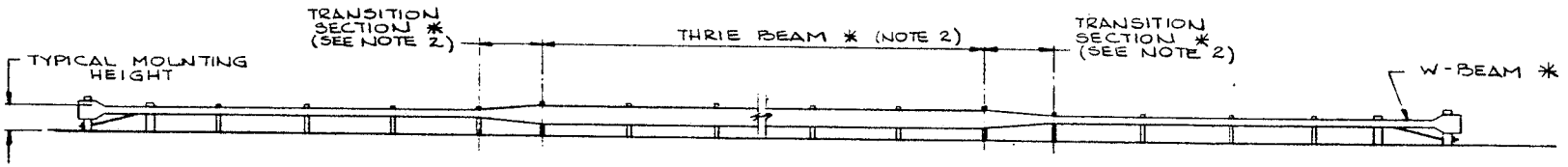

ELEVATION VIEW

SCALE: 1/8" = 1'-0"

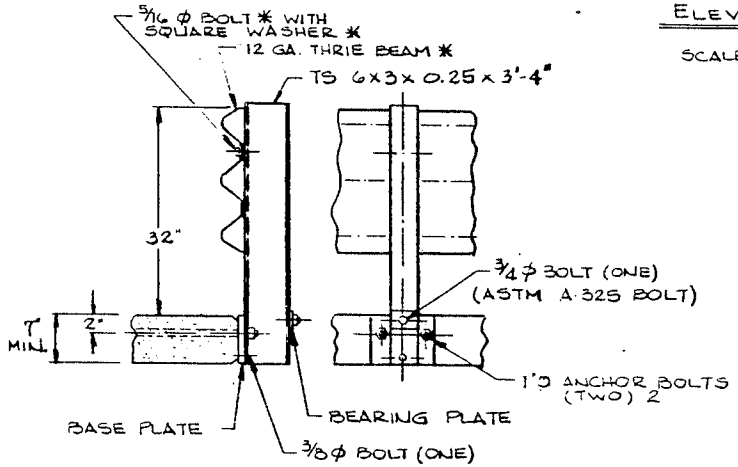

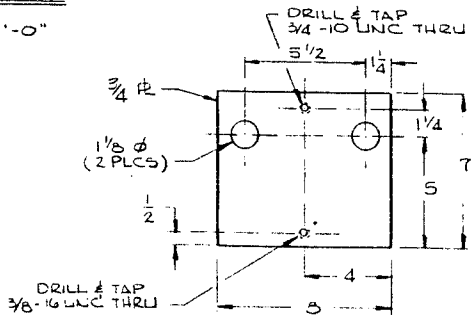

BASE PLATE (STEEL)

SCALE: 1/4" = 1"

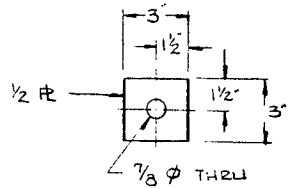

BEARING PLATE

SCALE: 1/4" = 1" (STEEL)

NOTES:

1. Components with asterisk can be found in the latest Guide to Standardized Highway Barrier Hardware, published by American Road and Transportation Builders Association, 525 School St.,SW, Wash., D.C. Length of G2 posts used in approach railing should be increased by 8 in. to accommodate additional depth of Thrie beam.
2. Thrie beam and W-beam material and hardware are specified in AASHTO M-180-78.
3. Unless otherwise noted bolts shall conform to requirements of ASTM A307 and nuts to requirements of ASTM A563, Grade A or better. Other bolts shall conform to the requirements of ASTM A325 and nuts to the requirements of ASTM A563, Grade C or better. All nuts and bolts shall be galvanized in accordance with ASTM A153.
4. Deck anchorage of the post assembly shall be provided by applying a 10-kip (45-kN) force to the post at 22 in. (550 mm) above the deck and designed according to the latest AASHTO bridge specification.
5. Steel shall conform to requirements of ASTM A-36 or equivalent and be galvanized according to ASTM A123.
6. BCT guardrail terminal details are specified in NCHRP Research Results Digest 102 or later revision.
7. Post elements shall conform to the requirements of ASTM A500 Grade B or ASTM A501 and be galvanized in accordance with the requirements of ASTM A123.

D-24

Figure 7. Low Service Level Thrie Beam. (Continued)

15 deg have been conducted. Results from computer simulations and structural element testing are also available for this design.

Test Summaries: All of the available records of tests on each of these four designs were collected and abstracted in a manner amenable to tabulation. These measured parameters are thus positioned so as to be contrasted directly with the suggested performance standards.

Tables D- 2 through D- 6 present these data.

Table D-2.

Table D-3. Reported Full-Scale Crash Tests of Tubular Thrie Beam on Tubes. (Ref. 1)

Test Designation Date Agency	Test Conditions	Max. Resultant Accelerations Lat./Long.	Comments About Performance of Vehicle	of Guard Rails
RF-5 7/15/75 SwRI	2250 lb 1971 Ford Pinto 17.1°	8.4/4.1	Redirection Satisfactory, Vehicle Driven After Test	Max Rail Defl. (dyn/perm) = 0.04 ft/0.04 ft maintained Structural Integrity-repairs not required
RF-6 7/16/75 SwRI	4500 lb 1973 Mercury Monterrey 25.0°	11.7/5.9	Redirection Satisfactory, Vehicle Driven After Test.	Max Rail Defl. (dyn/perm) = 0.4 ft/0.4 ft Maintained Structural Integrity.

Table D-4. Reported Full-Scale Crash Tests of Traffic Rails Similar to Tubular Thrie Beam on Tubes.

Test Designation Date Agency	Test Conditions	Max. Resultant Accelerations Lat./Long.	Comments About Performance of Vehicle	of Guard Rail
R(11N) -1 Design (Tubular Thrie Beam on 6" Round Tube on TS 6x6 Tube)				
RF-1 2/26/76 SwRI	2140 lb 1971 Ford Pinto 63.6 mph 16.8°	6.1/3.7	Vehicle driveable but frame was bent (1-RFQ-5);(01RFES6)	Max Rail Defl. (dyn/perm) = 0.1 ft/0.03 ft Maintained Structural integrity
RF-2 2/27/76 SwRI	4300 lb 1974 AMC Ambassador 66.6 mph 23.9°	8.2/8.2	Vehicle damage Severe, Vehicle disabled (1-RFQ-5);(01RFES6)	Max Rail Defl (dyn/perm) = 0.5 ft/0.5 ft Maintained Structural integrity
RF-13 3/2/76 SwRI	4500 lb 1974 AMC Ambassador 65.1 mph 26.1°	8.7/7.2	Vehicle damage severe, Vehicle disabled (1-RFQ-6);(01RFES5)	Max Rail Defl (dyn/perm) = 2.8 ft/1.5 ft Maintained Structural integrity
R(IIIN) -1 Design (Tubular Thrie Beam on W 6 x 15)				
RF-15 4/12/76 SwRI	2110 lb 62.7 mph 13.5°	9.8/4.5	Vehicle driveable (1-RFQ-3);(01FREW3)	Max Rail Defl (dyn/perm) = 0.09 ft/0.04 ft Bridge rail damage minor
RF-16 4/13/76 SwRI	4337 lb 1970 Plymouth Gran Coupe 62.4 mph 25.8°	12.1/11.0	Smooth redirection but vehicle disabled (1-RDQ-4);(01FREW4)	Max Rail Defl (dyn/perm) = 2.5 ft/0.2 ft Post-to Base Plate weld failures allowed large dynamic deflections.

D-5

Table . Reported Full-Scale Tests of Collapsing Ring Bridge Railing Systems. (Ref. 4)

Test Designation Date Agency	Test Conditions	Accelerations (max. .050 sec avg) Lat./Long.	Comments About Performance Of Vehicle	Of Guardrail
BR-1 6/18/73 SwRI	19,000 lb 1963 Ward Bus, Dodge Chassis 34.4 mph 7.5°	0.40/0.86	Damage Minimal	Max. Rail Defl. (dyn/perm) = 0.5 in./0.5 in.
BR-2 6/29/73 SwRI	19,000 lb 1963 Ward Bus, Dodge Chassis 56.0 mph 7.3°	2.67/1.26	Damage Minimal	Max. Rail Defl. (dyn/perm) = 3.4 in./3.4 in. Slight rail and ring set
BR-3 7/27/73 SwRI	3,960 lb 1963 Ford Galaxie 60.0 mph 24.7°	8.46/6.05	(1-RFQ-5)(01RFES2) Damage Severe	Max. Rail Defl. (dyn/perm) = 8.2 in./7.1 in. Moderate rail and ring set
BR-4 SwRI	4,097 lb 1963 Ford Galaxie 60.0 mph 25.9°	6.6/6.8	Fender ripped away Roof collapsed	Bridge rail fractured at weld--speared body
BR-5 10/4/73 SwRI	3,910 lb 1964 Chevrolet Impala 56.1 mph 23.9°	6.58/5.61	(1-RFQ-5)(01RFES2) Smooth redirection but with serious front end damage	Max. Rail Defl. (dyn/perm) = 16.5 in./13.8 in. Performed well

Table D-5. Reported Full-Scale Tests of Collapsing Ring Bridge Railing Systems (Continued). (Ref. 4)

Test Designation Date Agency	Test Conditions	Accelerations (max. .050 sec avg) Lat./Long.	Comments About Performance Of Vehicle	Of Guardrail
BR-6 10/18/73 SwRI	2,090 lb 1972 Volkswagen Sedan 55.7 mph 23.5°	12.24/6.15	(1-RD-5)(01RFES2) Smooth Redirection	Max. Rail Defl. (dyn/perm) = 6.0 in./4.0 in.
BR-7 11/30/73 SwRI	4,230 lb 1962 Ford Galaxie 56.7 mph 29.1°	8.18/5.57	(1-RFQ-5)(01RFES2) Severe vehicle damage	Max. Rail Def. (dyn/perm) = 30.0 in./18.0 in. Full collapse of ring
BR-8 12/13/73 SwRI	19,000 lb 1963 Ward Bus, Dodge Chassis 60.9 mph 13.9°	3.90/2.09	Two distinct impacts	Max. Rail Defl. (dyn/perm) = 20.6 in./16.4 in. Two posts sustained damage - Complete ring collapse
BR-9 6/5/74 SwRI	40,000 lb 1955 GMC Scenicruiser 54.3 mph 19.1°	2.63/1.42	Smooth redirection	Max. Rail Defl. (dyn/perm) = 60.4 in./54.0 in. Several post failures base plate bending and bolt tension failures
BR-10 6/26/74 SwRI	40,000 lb 1958 International Tractor/40-ft Trailer 55.1 mph 19.0°	8.86/3.55	Tractor damage slight, trailer on side	Max. Rail Defl. (dyn/perm) = 48.0 in./23.2 in. Several post failures base plate bending and bolt tension failures

D-5

D-5

Table . Reported Full-Scale Tests of Collapsing Ring Bridge Railing Systems (Continued). (Ref. 4)

Test Designation Date Agency	Test Conditions	Accelerations (max. .050 sec avg) Lat./Long.	Comments About Performance Of Vehicle	Of Guardrail
BR-11 2/11/75 SwRI	40,000 lb 1955 GMC Scenicruiser 54.9 mph 15.1°	2.14/1.2	Driveable after the test	Max. Rail Defl. (dyn/perm) = 48.0 in./35.0 in. Several base plate bolts failed in tension
BR-12 3/19/75 SwRI	70,000 lb 1964 International Tractor/40-ft Trailer 44.4 mph 10.0°	3.0/5.0	Tractor damaged due to jackknife after redirection. Trailer overturned	Max. Rail Defl. (dyn/perm) = 11.8 in./9.8 in. A few base plate bolts failed in tension
BR-13 4/2/75 SwRI	4,400 lb 1969 Ford Custom 62 mph 22.7°	7.74/5.33	(1-RFO-5)(01RFES2)	Max. Rail Defl. (dyn/perm) = 21.0 in./19.0 in. Sedan crashed into unrepaired rail from BR-12
BR-14 4/17/75 SwRI	40,000 lb 1965 International Tractor/40-ft Trailer 57.0 mph 15.6°	7.8/1.1	Tractor and trailer overturned	Max. Rail Defl. (dyn/perm) = 57.4 in./53.4 in. Base plates on nine posts failed, guardrail downstream of bridge deck failed

D-46

D-6

Table . Reported Full Scale Crash Tests of Low Service Level Thrie Beams.

Test Designation Date Agency	Test Conditions	Accelerations (.050 sec avg) Lat./Long.	Comments About Performance Of Vehicle	of Bridge Rail
Agency Wood Post System (6" x 6" x 3'10"; Post Spacing 8' 4" Centers)				
W-1 8/29/78 SwRI	4500 lb 1972 Pontiac Bonneville 44.3 mph 20°	2.3/4.0	(11-FL-2) (11LFES2) Moderate with some underside damage	Max Rail Defl (dyn/perm) = 3.5 ft/1.5 ft four severed post, two deformed beam sections.
W-2 9/15/78 SwRI	4500 lb 1975 Plymouth Fury 58.9 mph 16.3°	2.4/1.7	(11-FL-1) (11LFES1) Some frame damage.	Max Rail Defl (dyn/perm) = 4.2 ft/2.6 ft Eight severed posts, three 25-ft sections rail damaged.
W-3 11/29/78 SwRI	4500 lb 1976 Plymouth 61.9 mph 20°	3.3/4.0	(11-FL-2) (11FLES2) Smoothly redirected	Max Rail Defl (dyn/perm) = 2.6 ft/2.1 ft Six posts severed, once cracked, Two 25 ft section thrie beam damaged.
W-4 11/ /78 SwRI	2250 lb 1974 Chevrolet Vega 63.0 mph 18.7°	5.6/2.4	(11-FL-2) (11LFES2) Minor, rim damage and flat on wheel making contact	Max Rail Defl (dyn/perm) = 3.8 ft/2.5 ft Nine posts severed, once cracked, Two 25-ft sections thrie beam damaged.
W-5 12/15/78 SwRI	2250 lb 1974 Chevrolet Vega 44.3 mph 20°	4.2/2.3	(11-FL-2) (11LFES2) Sheet metal, bumper, rim damage. Both tires flat	Max Rail Defl (dyn/perm) = 1.6 ft/0.3 ft Two post severed, one fractured. One 25-ft section thrie beam damaged.

Con't. Table D-6. Reported Full Scale Crash Tests of Low Service Level Thrie Beams.

Test Designation Date Agency	Test Conditions	Accelerations (0.050 sec avg.) Lat./Long.	Comments About Performance Of Vehicle	Of Bridge Rail
Steel Post System (TS 6 x 3 x 0.25 x 3'4"; Post Spacing 8'4" centers)				
S-3 9/22/78 SwRI	4500 lb 1975 Plymouth Fury 61.7 mph 16.6°	3.2/3.1	(11-FL-2) (11FES2) Extensive bumper and fender damage both left tires "blown"	Max Rail Defl (dyn/perm) = 2.5 ft/0.33 ft Three posts broke away but reusable, two 25-ft railing sections bent.
S-4 9/ /78 SwRI	2250 lb 1974 Chevrolet Vega 58.6 mph 16.0°	4.6/1.8	(11-FL-2) (11LFES2) Minimum. left front tire stripped	Max Rail Defl (dyn/perm) = 0.8 ft/0.7 ft One 25-ft sections thrie beam damaged Concrete crushed under one post base plate.
S-6 10/ /78 SwRI	2250 lb 1974 Chevrolet Vega 60.0 mph 16.0°	5.2/2.9	(11-FL-2) (11LFES2) Moderate damage. Left front rim damage and flat	Max Rail Defl (dyn/perm) = 1.2 ft/0.8 ft One 25-ft section thrie beam severely damaged. Two posts failed.

APPENDIX E
GUIDELINES FOR DESIGNING TRAFFIC RAILING FOR BRIDGES

General

A traffic railing must contain and smoothly redirect the selected design vehicles with minimum accelerations when tested under prescribed conditions of speed and approach angle. Railing features that must be considered in designing to meet these objectives are as follows:

1. Geometrics
2. Strength
3. Flexibility or Stiffness

Although each of these may be addressed somewhat independently, in the final analysis, they all interact to determine performance of the railing. The approach taken here is to first describe acceptable geometrics that will result in "smooth" redirection of vehicles within the size range and impact conditions being considered. Once this is accomplished and the phenomenon being addressed is limited to acceptable "smooth" redirections, then the required strength and flexibility of the railing system may be described.

Vehicles studied in this program ranged in size from a 1,800-lb Honda Civic to a 32,000-lb intercity bus. However, a subpart of this vehicle spectrum may be addressed with the guidelines presented. Figures E-1 through E-5 present descriptions of vehicles used in this program and considered in development of design guidelines.

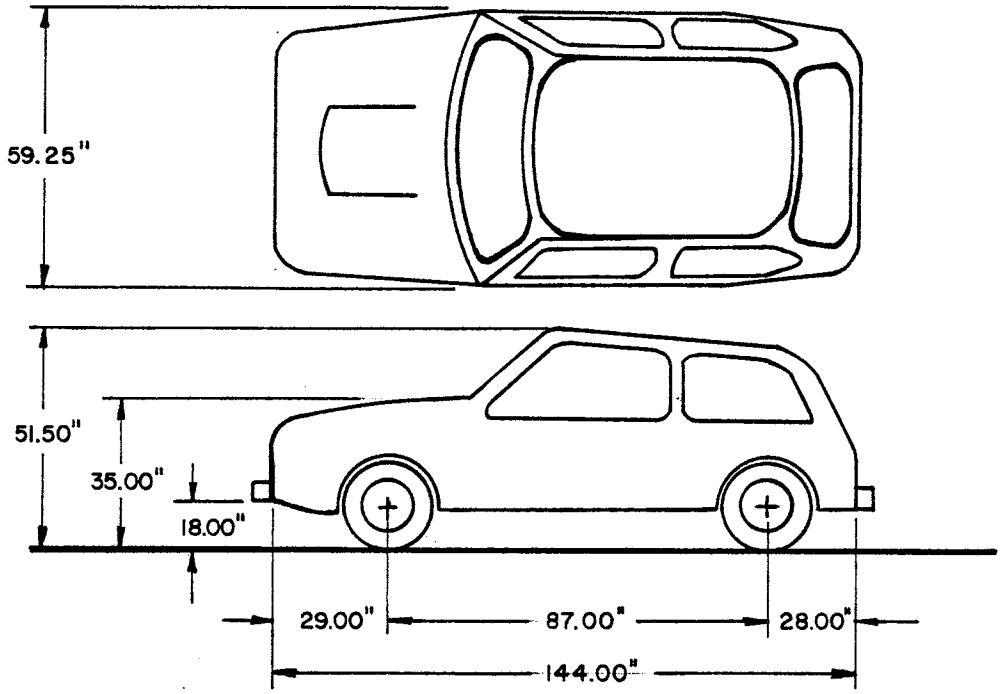

Weight:	1,400 lb w/o instr.	instr: 550 lb
Wheel Diameter:	21.5 in.	
Bumper Height:	17 in. to bottom	21 in. to top

Figure E-1. Honda 1974.

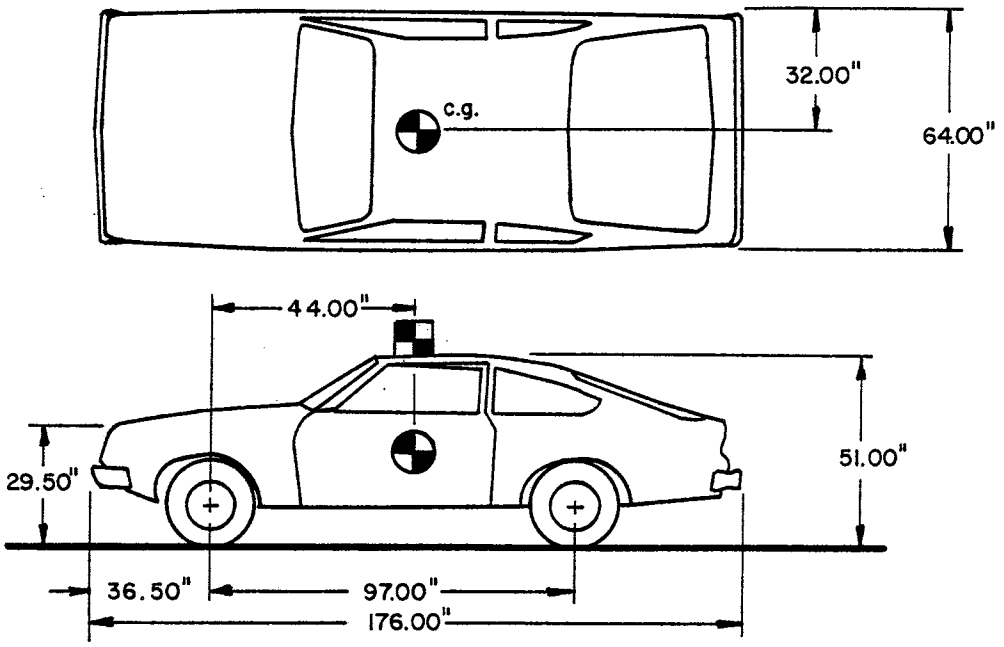

Weight:	2,230 lb w/o instr.	instr: 550 lb
Wheel Diameter:	22.5 in.	
Bumper Height:	15 in. to bottom	20 in. to top

Figure E-2. Vega 1974.

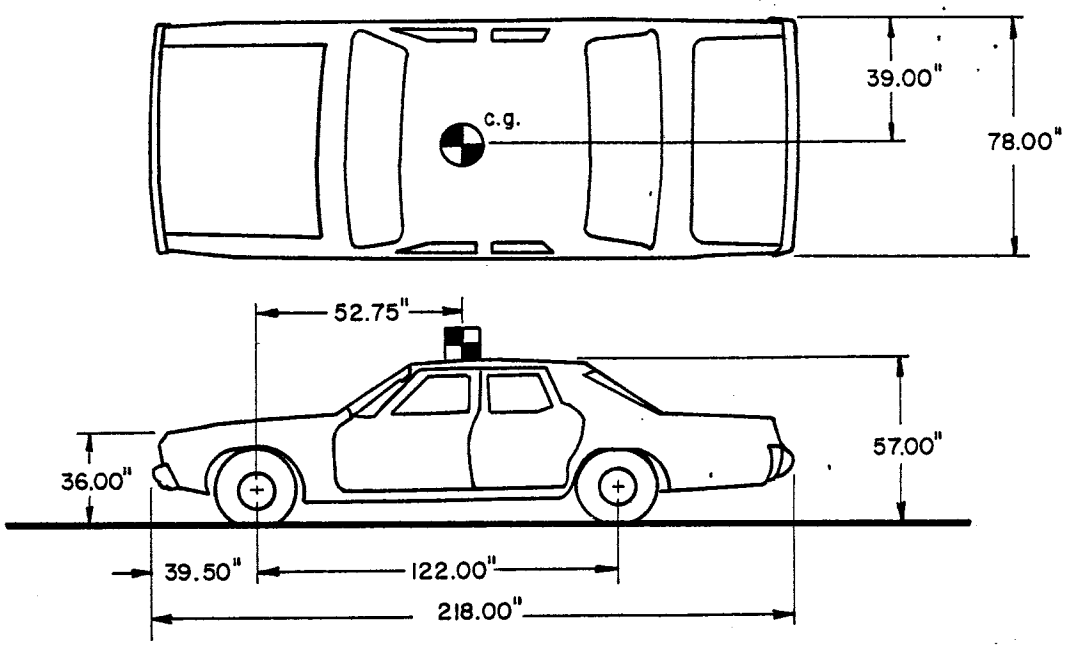

Weight:	4,080 lb w/O instr.	instr: 550 lb
Wheel Diameter:	27.5 in.	
Bumper Height:	14 in. to bottom	21 in. to top

Figure E-3. Plymouth Fury 1974-76.

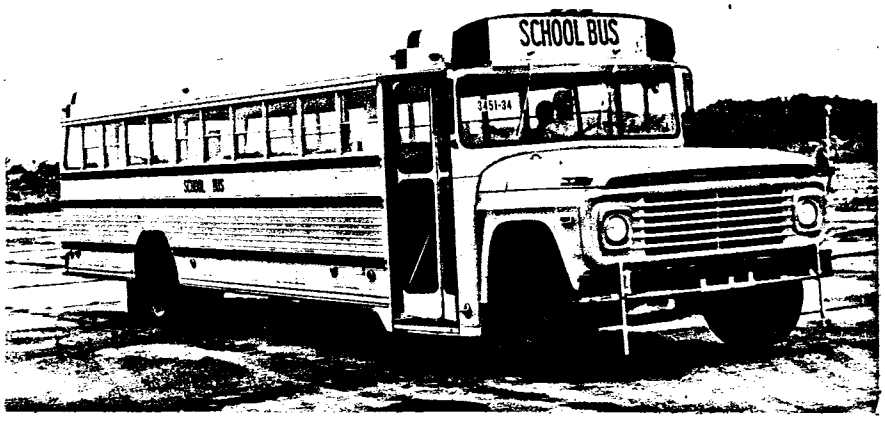

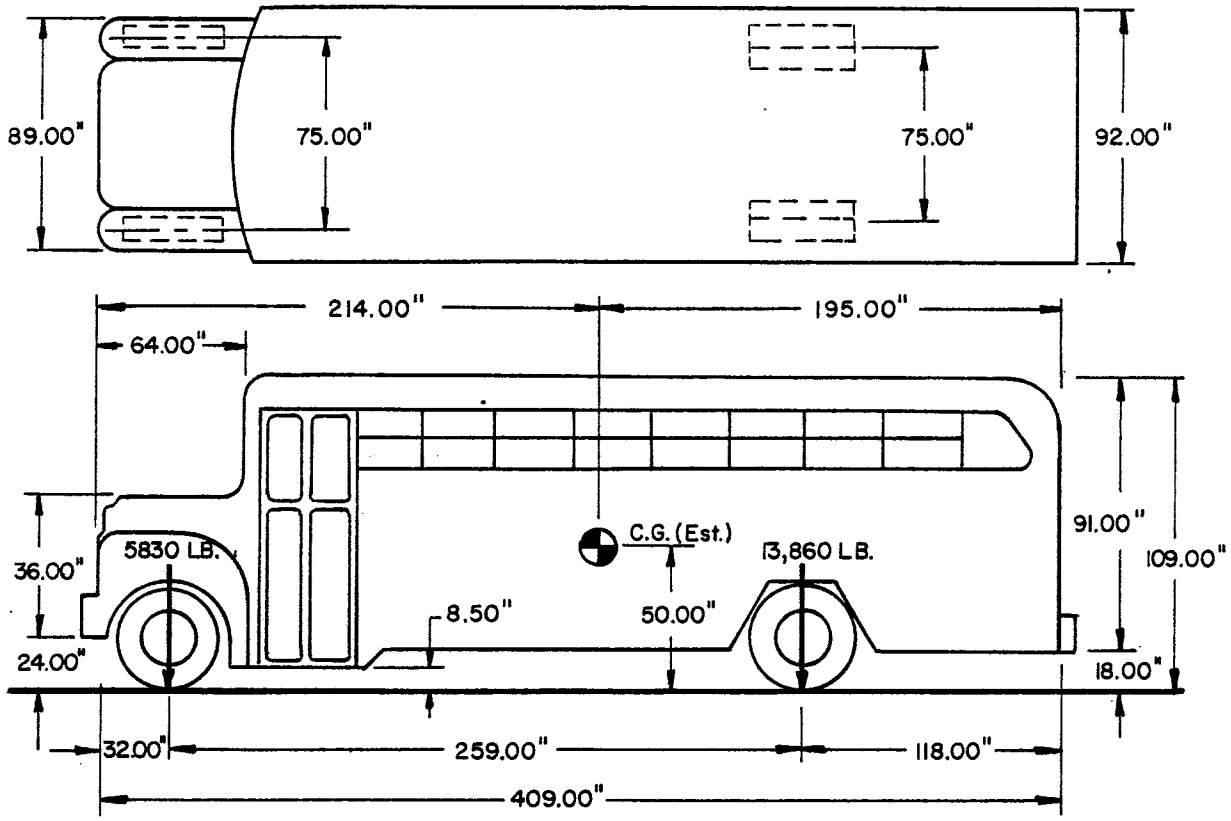

Weight: 12,800 lb 2/o instr. instr: 7,000 lb

Wheel Diameter: 37 in.

Bumper Height: 24 in. to Bottom 30 in. to Top

Figure E-4. Ford Sixty-Six Passenger School Bus 1970.

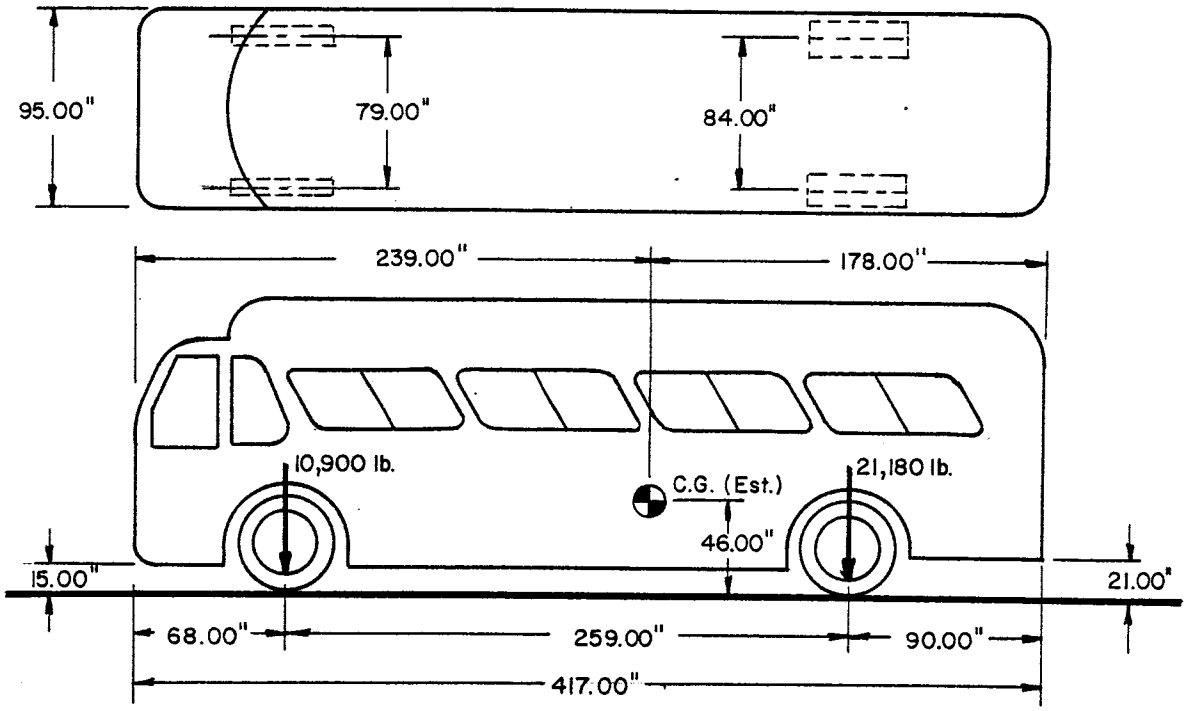

Weight: 21,000 lb w/o instr. instr: 11,000 lb

Wheel Diameter: 42 in.

Bumper Height: 15 in. to Bottom 25 in. to top

Figure E-5. GMC Coach 1962 (Intercity Bus).

Geometrics

Geometric features necessary to describe an acceptable bridge railing system are:

1. Height of Railing
2. Curbs
3. Vertical Openings/Post Setback/Frontal Area

Height of Railing: For passenger vehicles, the rail must be high enough not only to prevent the vehicle from vaulting over or traversing the railing, but also to prevent the vehicle from rolling onto the railing. Historically, the height of a railing design has been thought of as being the overall height to the top extremity of the upper rail element measured from a reference surface such as the top of the deck or safety walk. In beam and post systems particularly, and to some extent in concrete parapet railing systems, the resisting force provided by the railing is not at this upper extremity, but is somewhat lower. The resisting force provided by the top rail element in a beam and post system is probably closer to the centroid of the rail element. For a concrete parapet or wall, the resisting force may be within 2 to 3 in. of the top extremity. Therefore, when one considers the influence of railing height on vehicle roll behavior, the effective height rather than the total geometric height should be considered. The effective height is defined as the distance from the pavement surface to the centroid of the resisting force provided by the railing system.

In the test program reported herein, all in-service railing systems demonstrated, in tests with automobiles, that they were of adequate height for this size range of vehicles. The lowest height railing, the Texas T101 with a total height of 27 in. or an effective height of 24 in. was found to be adequate for the 7000-lb mini-bus.

Tests with a 20,000-lb school bus were conducted on the Colorado Type 5, Texas T101, and North Carolina railing systems. In tests on the T101 system, the railing was sufficiently low that an exceptionally large portion of the impact force was transmitted through the front suspension of the vehicle with lesser interaction between the railing and other parts of the vehicle. This caused the front axle and wheels to be separated from the vehicle with the front end of the vehicle falling to the ground, thereby lowering the center of gravity and providing a stablizing influence on the vehicle. The bus remained upright throughout the collision in both tests on this railing. Because of this, not much general information about required height of railing for the bus can be gained from tests on the T101 system.

In school bus tests on the 30-in. high Colorado railing (effective height of 27 in.) and the 32-in. high North Carolina railing (effective height of 30 in.) the bus rolled onto the railing and slid off the end of the test installation coming to rest on its side. This leads one to conclude that 30 in. is inadequate railing height to redirect a typical school bus without rollover.

In the school bus test on the 42-in. high instrumented wall, roll stability was entirely adequate indicating that 42 in. is sufficient height.

Table E-1 contains values of magnitude and height of resultant lateral force (highest .05 sec average) measured in the series of tests on the instrumented wall. In the school bus test, the force was located 29.0 and 32.7 in. above the pavement surface for the initial and final impacts, respectively. For the intercity bus, the values, 26.3 and 28.4 in., were slightly lower. Vertical location of the resultant lateral force for the automobiles ranged from 15.3 to 24 in. above the pavement surface.

The HPR 230 (7) railing with an effective height of 39 1/2 in. to the center of the top rail element also demonstrated successful performance in a school bus test.

A simple model for evaluating the influence of effective railing height on vehicle roll is presented in Figure E-6 (6). Equations E-1 and E-2 predict the approximate effective height required for a bridge railing to prevent a vehicle from rolling. This effective height is a function of the lateral acceleration of the vehicle, height of vehicle center of gravity, width of vehicle, and tire-pavement friction. Figure E-7 presents a comparison of the required effective height of a railing to the center of gravity height for passenger cars and buses.

From this it is observed that a school bus with a c.g. height of 51 in. would require an effective railing height of 33 in. An intercity bus with a c.g. height of 48 in. would require an effective railing height of 29 in.

The data and theoretical treatment discussed above were considered collectively to arrive at the minimum required effective railing height

Table E-1. Vertical Location and Magnitude of Forces from Instrumented Wall.

Test Number and Conditions	Initial Impact Force		Final Impact Force	
	Magnitude	Height	Magnitude	Height
3451-29 2,050 lb/58.9 mph/15.5°	18.4	17.0	8.4	18.7
3451-37 2,090 lb/58.5 mph/21.0°	21.1	19.0	13.1	20.7
3451-30 2,800 lb/58.3 mph/14.8°	18.5	18.1	13.9	15.3
3451-31 2,830 lb/55.9 mph 20.0°	22.0	19.3	22.5	21.3
3451-32 4,680 lb/59.7 mph/16.5°	52.5	21.4	28.3	24.0
3451-36 4,740 lb/59.9 mph/24.0°	59.9	21.8	28.3	22.5
3451-34 20,030 lb/57.6 mph/16.5°	63.7	29.0	73.8	32.7
3451-35 32,020 lb/60.0 mph/15.0°	85.0	26.3	211.0	28.4

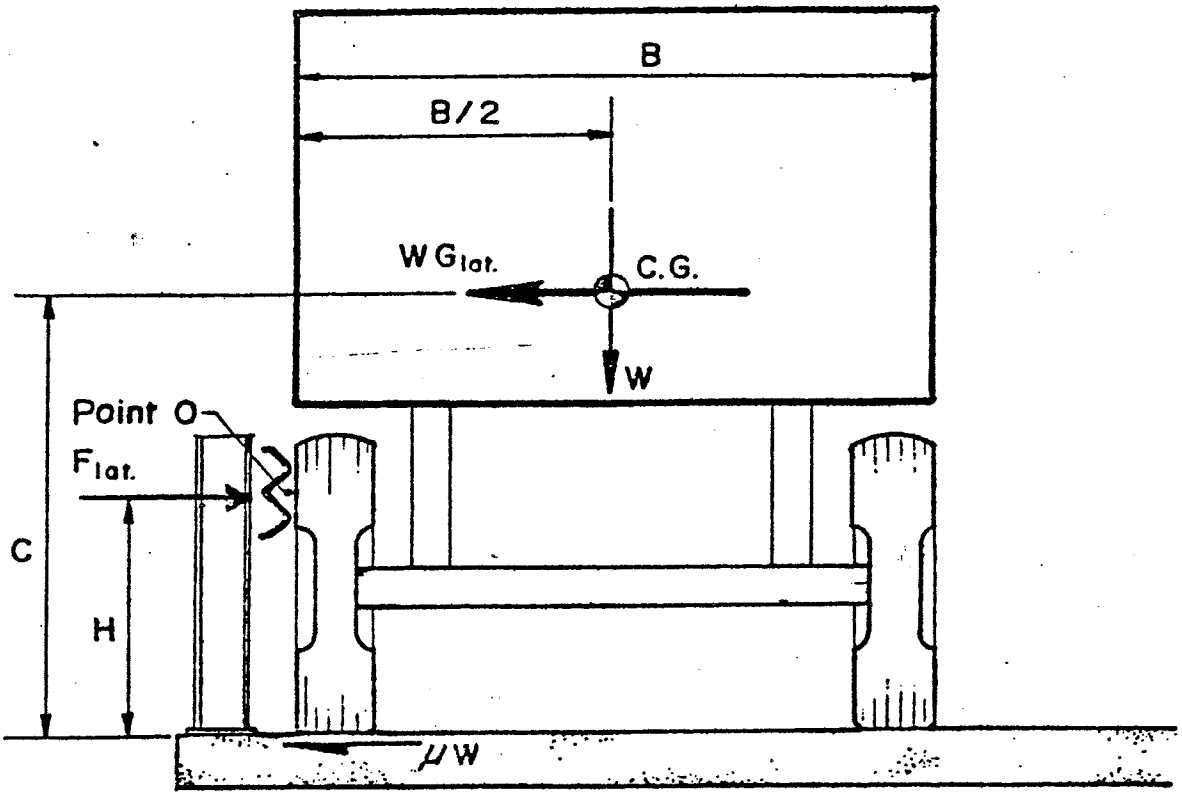

W = weight of vehicle

G_{max} = ~~G_{lat}~~ = avg. lateral deceleration of vehicle from Eq. 1 × $\frac{\pi}{2}$

~~μ = coeff. of pavement friction = 0 to 0.30~~

C = height to vehicle c.g., in.

H = effective height of barrier rail, in.

O = center of overturning rotation located at centroid of of rail or top of concrete parapet

B = width of vehicle, in.

$F_{lat.}$ = resisting railing force located at effective rail height

$$M_O = W G_{lat.}(C-H) - W B/2 - \mu W H = 0$$

$$H = \frac{G_{lat.} C - B/2}{\mu + G_{lat.}} \qquad \text{Eq (E-1)}$$

NEGLECTING FRICTION,

$$H = \frac{G_{lat.} C - B/2}{G_{lat.}} \qquad \text{Eq (E-2)}$$

E-6

FIGURE 5 APPROXIMATE ANALYSIS OF REQUIRED BRIDGE RAIL EFFECTIVE HEIGHT TO PREVENT VEHICLE FROM ROLLING OVER RAIL. (Ref. 10)

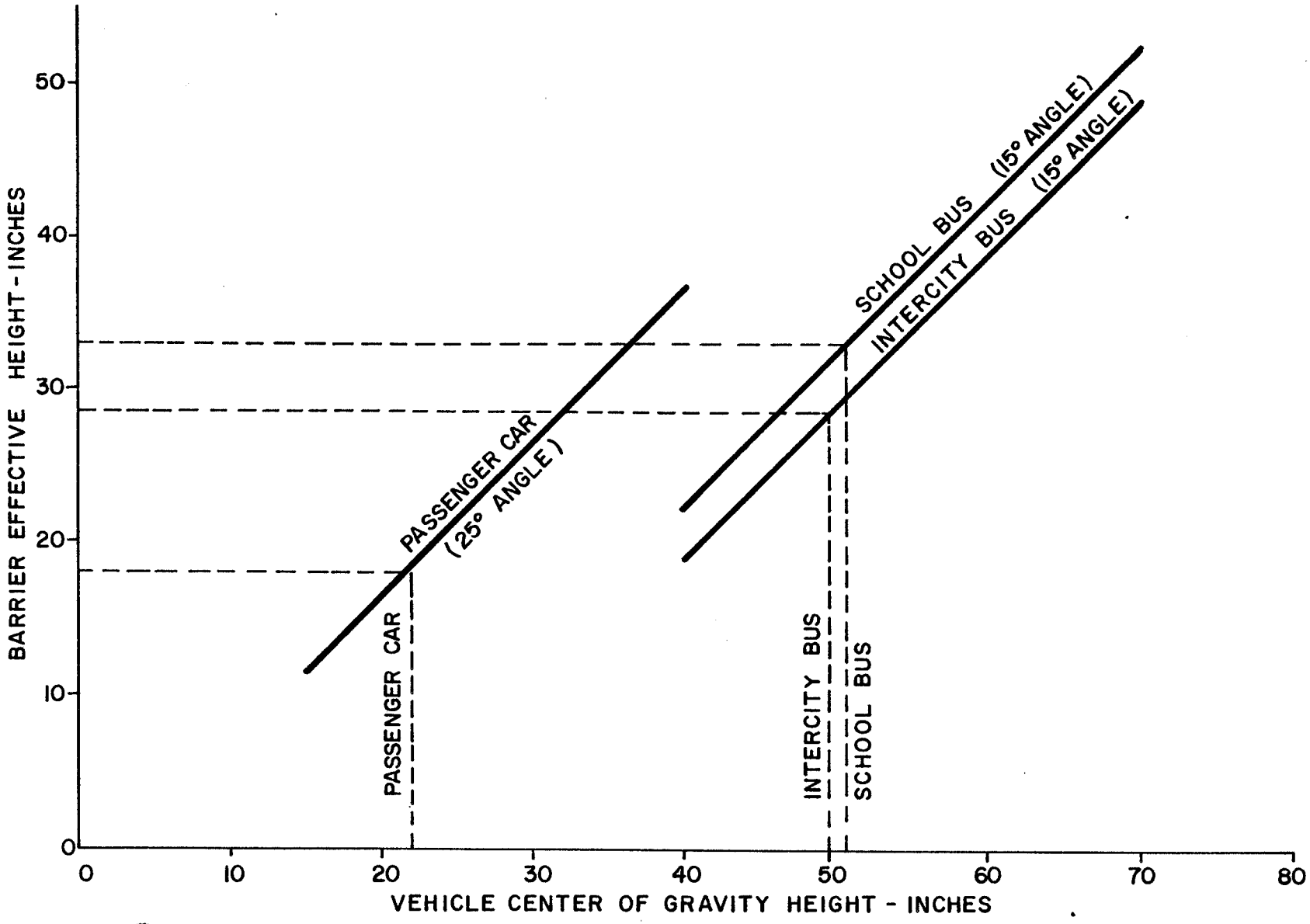

E1-3

E-7

Figure . Comparison of Barrier Effective Height to Vehicle Center of Gravity Height (60 mph impact speed).

for various vehicles presented in Table E-2. One should again note that these are effective heights and not total geometric heights.

Curbs: Two railing systems with curbs, the New Hampshire Two-Bar Aluminum Railing with a protruding curb and the Colorado Type 5 Railing with a flush curb, were tested in this study. Also, significant test data and HVOSM simulation results involving interaction of automobiles with curbs are reported in NCHRP Report 150 (13). That report demonstrates that curbs of the type and height studied therein offer very little redirection capability except at very small encroachment angles. A 6-in. high, type C curb, for example, did not provide redirection of automobiles at speeds above 60 mph and encroachment angles above 5 deg.

In testing with automobiles on the New Hampshire railing reported herein, impact angles were 15 and 20 deg. In all tests, the automobile front wheel traversed the curb and interacted with the metal portion of the railing. The tire was deflated by the curb and the automobile continued forward with the lower extremity of the metal portion of the wheel rolling on the top surface of the curb. This left the wheel aligned with the 14-in. vertical opening between the top of the curb and the lower metal rail element. The automobile then continued forward with the bumper and wheel snagging on the next downstream post. In 15-deg tests with the Honda and Vega, snagging was more severe for the Honda. The railing did not suffer structural distress in either test. In the 20-deg test with a Vega, snagging was more severe than in the 15-deg test and the railing suffered structural damage.

Table E2 . Required Effective Height of Railing to Prevent Rollover of Vehicle.

VEHICLE	TEST CONDITIONS	REQUIRED MINIMUM EFFECTIVE RAILING HEIGHT (in.)
Automobiles 1,800 to 4,500 lb	60 mph and up to 25 deg	24
School Bus 20,000 lb	60 mph/15 deg	34
Intercity Bus 32,000 to 40,000 lb	60 mph/15 deg	30

Snagging and structural damage also occurred in the 15-deg test with the 4500-lb automobile.

Similar, although less severe, behavior occurred in automobile tests on the Colorado Type 5 railing. In 15-deg tests with a Honda and a Vega, the curb deflated the front tire and the vehicle penetrated the 15-in. opening between the top of the curb and the bottom of the metal rail element. This effect was more prounced in the 25-deg test with a 4500-lb automobile. Although these two railing designs have undesirable geometrics which contributed to their poor performance, the curbs, especially the protruding curb in the New Hampshire design, were the cause of much damage to the test vehicle. Again, curbs offer little redirection capability. They are extremely rigid and their positioning serves to promote damage to an automobile wheel. Curbs, either flush or protruding, should not be used as a part of a bridge railing system.

Some railing desings, such as the North Carolina railing, make use of a concrete parapet (perhaps 18 in. high) with a metal rail mounted on top of it. While the 18-in. concrete parapet may be acceptable for automobiles (no automobile tests were conducted on the North Carolina railing) it is not recommended for larger vehicles such as school and intercity buses. There are two reasons for this. The 18-in. dimension is not adequate to prevent climbing of the larger diameter wheels. The nondeflecting curb on parapet in combination with a deflecting top rail element promotes roll of the larger vehicle.

If concrete parapets with metal rails on top are designed for these large buses and trucks, the concrete parapet should be at least 27 in. high.

On bridge structures where it is necessary to contain runoff water, curbs that are setback behind the traffic face of the railing (for beam and post railing systems) or concrete parapet type railings should be considered. If curbs are used in this position with beam and post systems, their presence should be ignored when determining the vertical clear opening between the deck and lower railing.

Vertical Openings/Post Setback/Frontal Area: Railing systems tested and reported herein that provide data on the influence of vertical openings and post setback on snagging are the Texas T101, Indiana 5A, and the modified Indiana 5A. Tests conducted on Texas HPR Study 230 (7) also provide data relative to this question. Cross-sectional drawings of these railings with pertinent dimensions are shown in Figure E-8.

Based on information gained from this group of tests, it was hypothesized that railing design features which influence snagging of a vehicle wheel on railing posts is a function of frontal area of the railing elements, height of the vertical opening, post setback, and impact angle. In systems withmultiple rail elements, location of the upper rail elements may also influence this relationship.

Snagging did not occur in any of the tests on the Texas T101 railing. However, the test series on this railing did not include a Honda automobile. This indicates that the geometry of this cross section is adequate for the Vega and larger automobiles at the conditions tested.

In a 15-deg test with a Honda on the Indiana 5A railing, snagging did not occur. However, snagging occurred in 20-deg tests with both the Honda and Vega. In the Honda test, the wheel overlapped the post

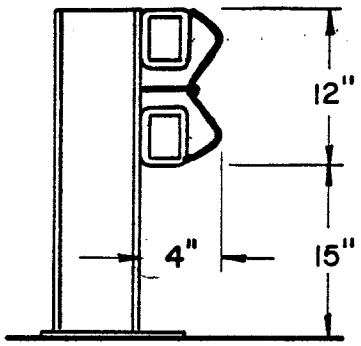

TEXAS T101

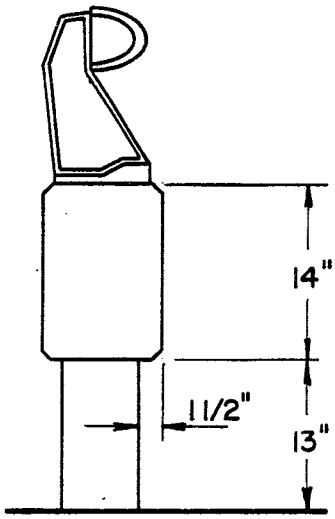

HPR 230
(TEXAS T202)

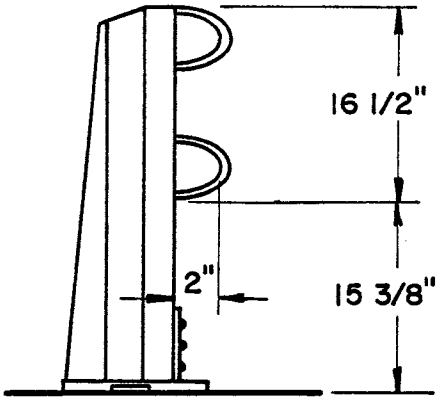

INDIANA 5A

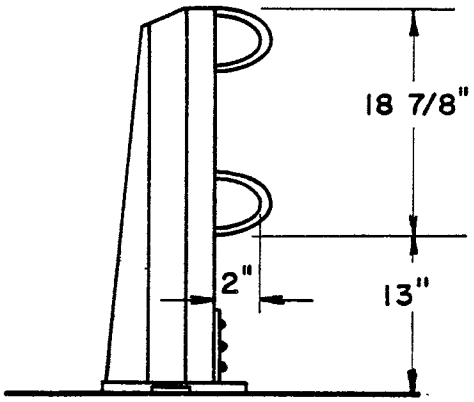

MODIFIED INDIANA 5A

Figure . Cross Sections of Selected Railing Systems Used in Evaluation of Snagging Behavior.

about 7 in. and in the Vega test the overlap was about 3 in. The 4500-lb automobile at a 25-deg impact angle snagged and penetrated this railing.

The modified Indiana railing also permitted snagging in a 20-deg test with a Honda. Overlap of the wheel on the post was about 7 in. This test was conducted to study the effect of lowering the bottom railing so that it would be centered 15 in. above the deck. However, with the rail element in this position, the bumper overrode the rail element and snagging was perhaps more severe than in the comparable test on the original Indiana 5A railing.

In a subsequent series of tests on this railing system, sponsored by the Aluminum Association, (14) a modified base (full thickness front to back) was used. Aluminum nuts were used on the anchor bolts in the first test. This railing was impacted with a 4500-lb Plymouth traveling 60.9 mph and at 25 deg. It failed to redirect the vehicle. This was primarily due to geometry of the railing allowing the vehicle to snag on a post and fail the anchor nuts. For the second test, the aluminum anchor nuts were replaced with steel ones. Again, the railing failed to contain the vehicle. Initiation of failure of the railing was attributed to geometric features. In this test, structural failure of posts occurred at the post-to-base plate riveted connection.

For the third test in this subsequent series, major modifications were made to the railing design. The lower, semi-elliptical rail element was replaced with 12-in. deep extruded section to provide more railing frontal area. The cross section of this design is shown in

Figure E-9. In a strength test, with a 4500-lb automobile impacting at 25 deg and 60 mph, this modified railing system performed satisfactorily. The added frontal area was sufficient to prevent snagging and allowed the railing system to contain and redirect the automobile.

A Honda test at 15-deg on the HPR 230 railing (7) resulted in snagging of the wheel with about 3 1/2 in. of overlap of the wheel on the post.

The small diameter wheel on a small automobile such as the Honda Civic obviously has a greater tendency to snag on railing posts than do larger wheels. However, this problem is further aggravated by the manner in which the wheel and suspension system on a front wheel drive automobile deforms during a collision. When a lateral load (from a rail element) is applied near the top of the wheel, the wheel tends to move in at the top and out at the bottom (large negative camber) more so than in the case of a conventional suspension system having an upper and lower control arm. Unfortunately, the present and expected trend in automobile design is toward not only the smaller automobile, but also front wheel drive designs for all sizes of automobiles and this should be considered in design of railing systems.

Cross sections of railing systems that provide information on snagging behavior are presented in Figure E-8. From tests on these systems and other referenced tests, values of post setback distance required to present snagging were determined and are listed in Table E-3. In this process, effective setback distances for systems with

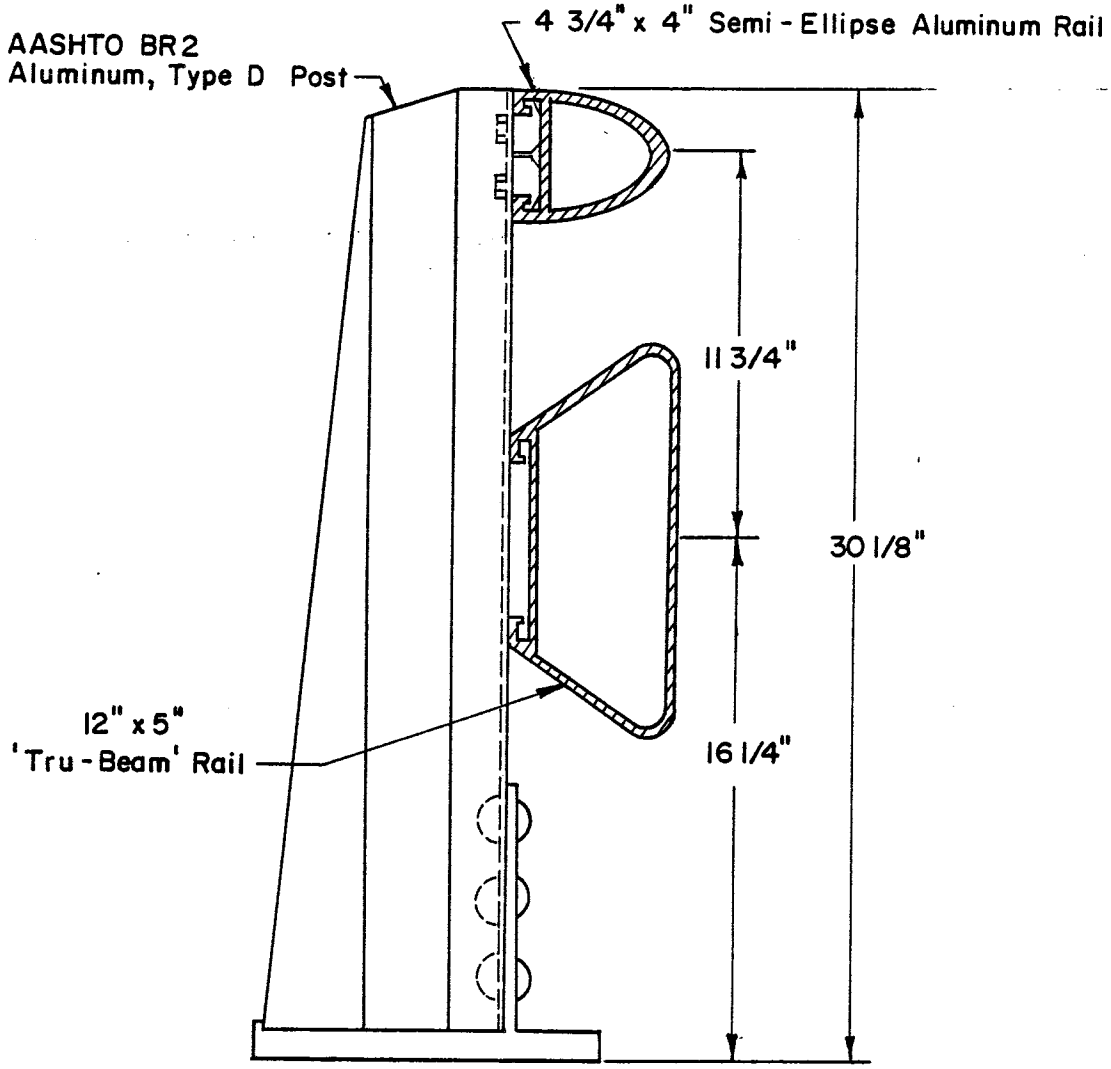

Figure E-9. Cross Section of Aluminum Railing System with 12 in. Deep Lower Rail Element.

E-3

Table . Post Setback Distance Required to Prevent Snagging.

Test Number	Automobile	Impact Angle (deg)	Railing	Height of Opening (in.)	Required Post Setback (in.)
3451-24	Honda	12.5	Indiana 5A	15 3/8	2
3451-27	Honda	20	Indiana 5A	15 3/8	9
3451-25	Vega	19.5	Indiana 5A	15 3/8	5
3451-28	Honda	19	Modified Indiana 5A	13	9
	Honda	15	HPR 230	13	5
3451-5	Vega	15	T101	15	5 1/2 or less

12-3

semi-elliptical and W-section rail elements were arbitrarily established. In situations where snagging occurred, after-test photographs and measurements were used to determine the distance that the wheel overlapped the post. This distance was added to the existing post setback to arrive at the required effective post setback to prevent snagging.

These values, for Honda and Vega tests, were plotted in Figure E-10. Two lines have been drawn through these data. The upper line is for railing systems having vertical dimensions of rail elements that total 12 in. or more (such as the Texas T101). The lower line is for railing systems having vertical dimensions of rail elements that total 8 in. or more.

Close study of the test data presented herein leads one to observe that deep rail elements such as the W-section, the aluminum Tru-beam, or the flat concrete face on the HPR 230 railing generally offer better redirection capability than do the thinner rail elements. This is due, in most part, to the fact that the thinner rail elements "cut into" the automobile more than the deep beams do. The thinner rail elements can be made to perform successfully, but much larger post setback distances are required. In Test 28, (Modified Indiana 5A Railing) the Honda wheel underrode the lower rail element and at the same time the bumper overrode the rail element. It is desirable for one or more rail elements to virtually block the space from about 9 or 10 in. above the deck to about 22 in. above the deck in order to adequately prevent partial penetration (and snagging) of automobiles with various bumper and front wheel geometrics.

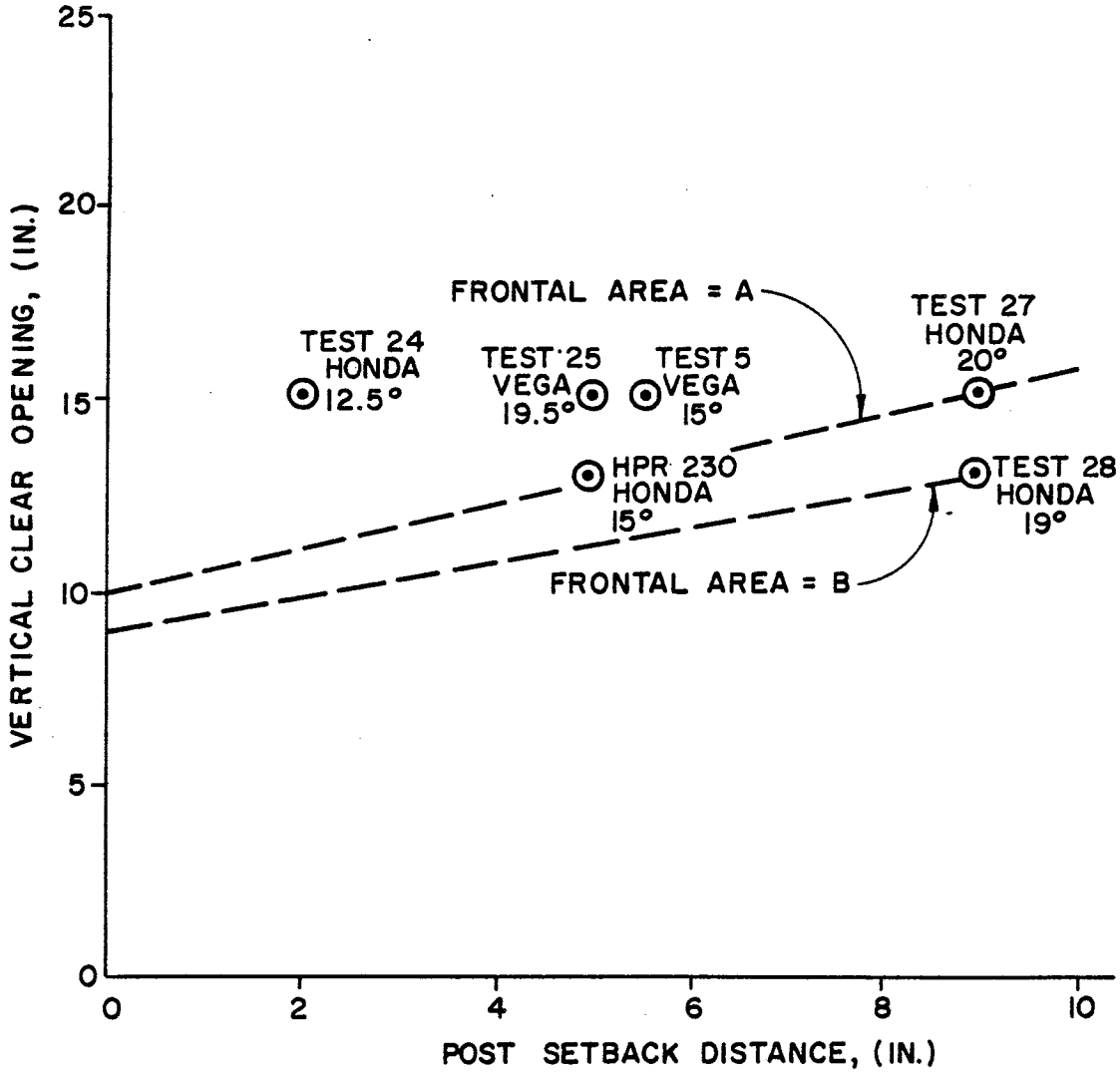

Figure E-10. Influence of Vertical Clear Opening on Snagging of Vehicle Front Wheel as a Function of Post Setback Distance.

Some geometrics of importance for the test vehicles used in this study are listed in Figure E-12. For automobiles, the smallest distance from the pavement surface to the center of the wheel is 10.5 in. and the largest distance from the pavement surface to the top of the bumper is 21 in.

One might note that the lines drawn in Figure E-10 are intended to be a conservative bound of the available data. The vertical clear opening dimensions involved in the tests varied from 13 to 15 3/8 in., a rather narrow range. When more test data are available for other values of clear opening, revision of the relationships may be indicated.

Selected data from Table E-3 were used to construct Figure E-11 in order to study the influence of impact angle on required post setback. It is recommended that relationships presented in Figure E-10 be considered applicable to 15-deg impact angles and that adjustments to these values of required post setback for other impact angles be based on the relationship in Figure E-11.

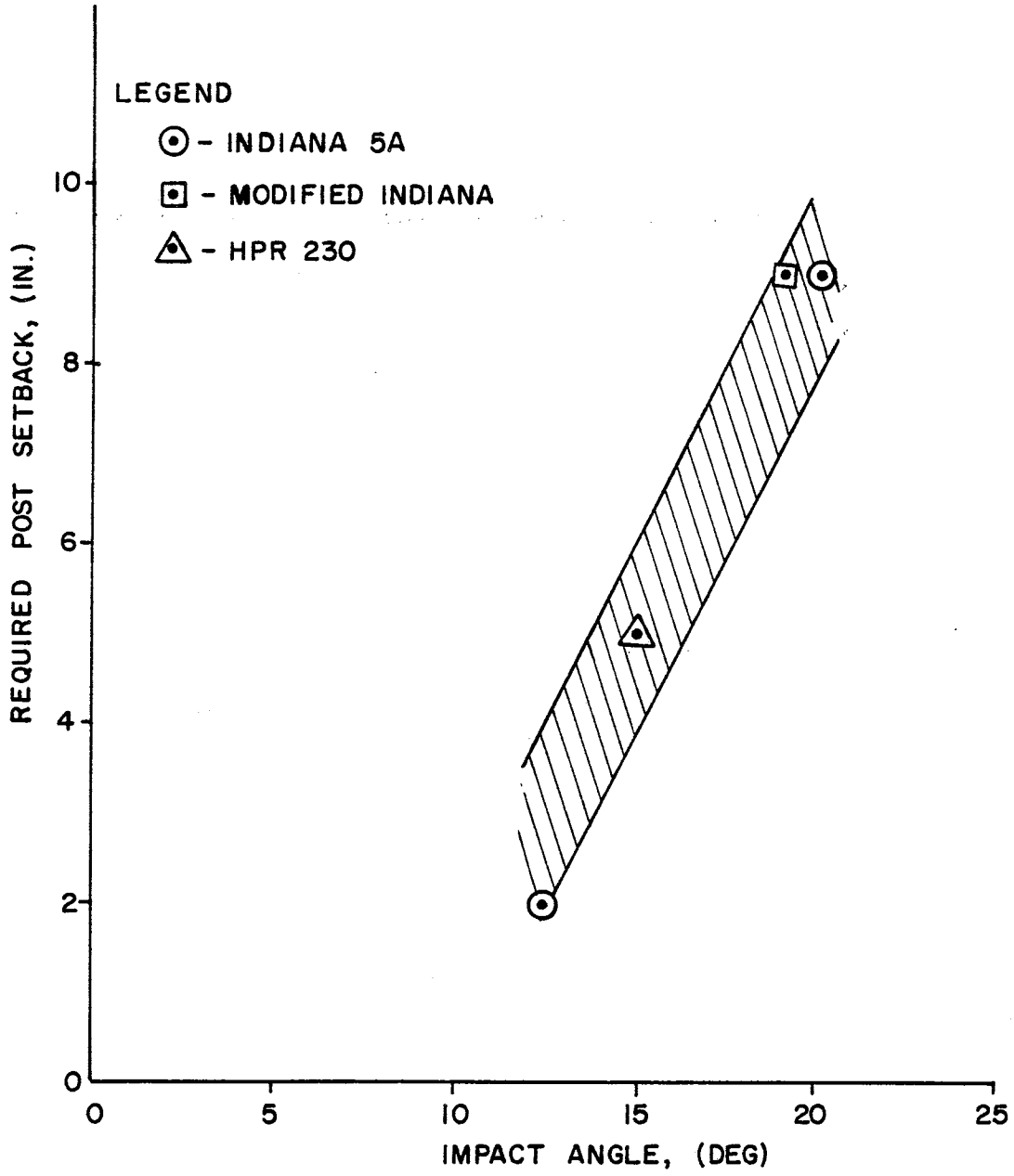

Figure E-11. Post Setback Distance Required to Prevent Snagging for the Honda. Vertical Openings of 13 and 15 3/8 in. in Railing.

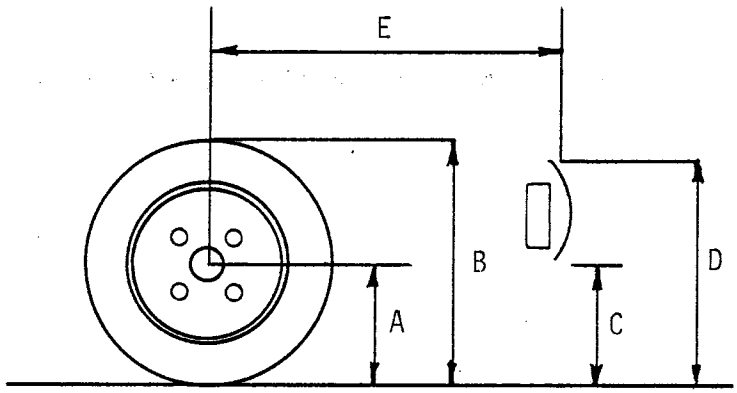

Front Wheel and Bumper

VEHICLE	TIRE SIZE	A in.	B in.	C in.	D in.	E in.
Honda	A78-12	10.5	21.5	17	21	27.0
Vega	A78-13	11.375	22.5	15	20	31.5
Plymouth	H78-15	13.5	27.5	14	21	37.0
S'bus	8.25-20	18.0	37.0	24	30	30.0
I'bus	10.00-20	20.25	42.0	15	25	55.0

Figure E-12. Dimensions of Selected Features of the Front Corner of Test Vehicles.

Strength

Lateral forces imposed by various test vehicles at various impact angles were measured in the series of tests on the instrumented wall and are reported in Appendix C. Data from these tests were analyzed to determine magnitudes, locations of resultants and distributions of forces. The force-time trace from each test showed that two distinct impacts (or impulses) occurred during each test. The initial impulse occurred when the front corner of the vehicle was in contact with the wall and the vehicle was being redirected. The final impulse occurred when the rear of the vehicle swung against the wall. Each of these impulses were analyzed to determine the highest 0.050 sec average force. The vertical position of the centroid of the force was then determined at corresponding time intervals. Results of these analyses are presented in Table E-1.

The manner in which forces were distributed along the length of the railing and in the vertical direction was then addressed. It was assumed that the force was distributed in the form of a half sine wave in both the longitudinal and vertical directions. This assumption yielded the equation:

$$R = \int_0^D \int_0^D q_{max} \sin \frac{\pi X}{L} \sin \frac{\pi Y}{D} \, dydx \qquad \text{Eqn (E-3)}$$

where q_{max} = Maximum bearing intensity, $\frac{k}{ft^2}$

R = resultant force, k

D = Vertical extent of the loaded area, ft

L = Longitudinal extent of the loaded area

The coordinates x and y, of the rectangular contact area are as shown in Figure E-13. The length of the contact area was measured from the plan view movie frame that fell nearest the center of 0.050 sec time interval (for both the initial and final impact). The depth dimension was deduced by subtracting the 3 in. sill height from the height to the resultant in Table E-1 to find $\frac{D}{2}$ or, when the resultant lay above $\frac{39}{2} + 3 = 22.5"$, (the midheight of the wall segments) by subtracting the resultant height from 42" to find $\frac{D}{2}$. When integrated and inverted to solve for the maximum intensity in terms of the measured resultant one finds that:

$$q_{max} = R \frac{\pi^2}{4DL} \qquad \text{Eqn (E-4)}$$

A typical distribution, (for the initial impact of the 4,470-lb vehicle at 59.9 mph and 24 deg) is shown in Figure E-14. The results of the eight tests are reflected in Figures E-15 through E-30.

Computed maximum contact pressures and the associated lengths and heights are summarized in Table E-4 .

The maximum values contact pressures given in Table E-4 may be converted to maximum values of distributed load in kips per ft along the length of the railing by multiplying the pressures by $2D/\pi$:

$$W_{max} = q_{max} \frac{2D}{\pi} \qquad \text{Eqn (E-5)}$$

These computations were performed and the results are presented in Table E-5. These data are also plotted in Figures E-31 and E-32 against

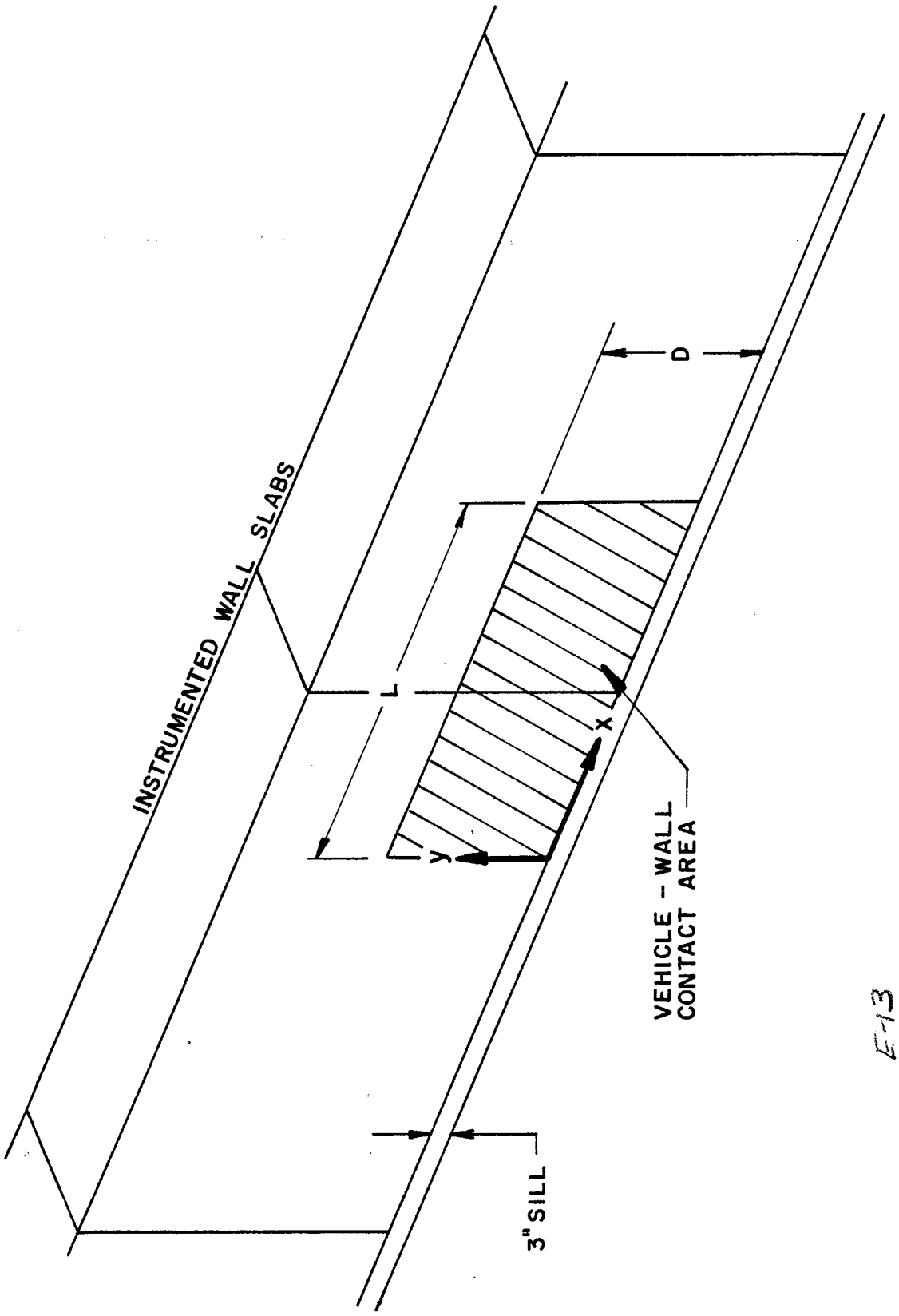

Figure E-13. Sketch Showing Rectangular Contact Area on Instrumented Wall.

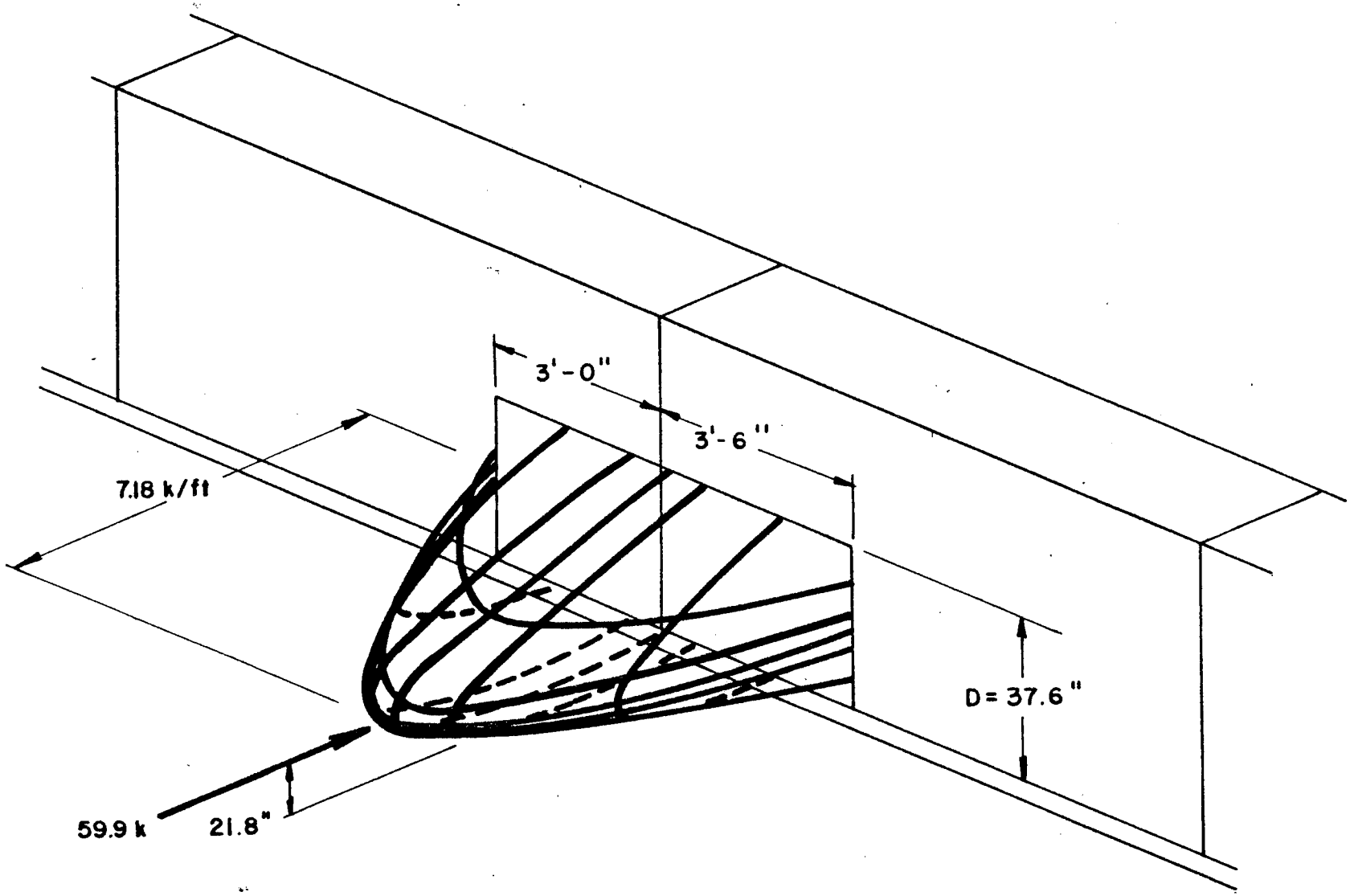

To calculate the magnitude of the maximum vehicle to wall pressure:

$$q_{max} = (59.9\ k)\ \frac{\pi^2}{4DL} = 7.16\ k/ft^2$$

E-14

Figure N2. Sketch Indicating the Distribution of Contact Pressures.

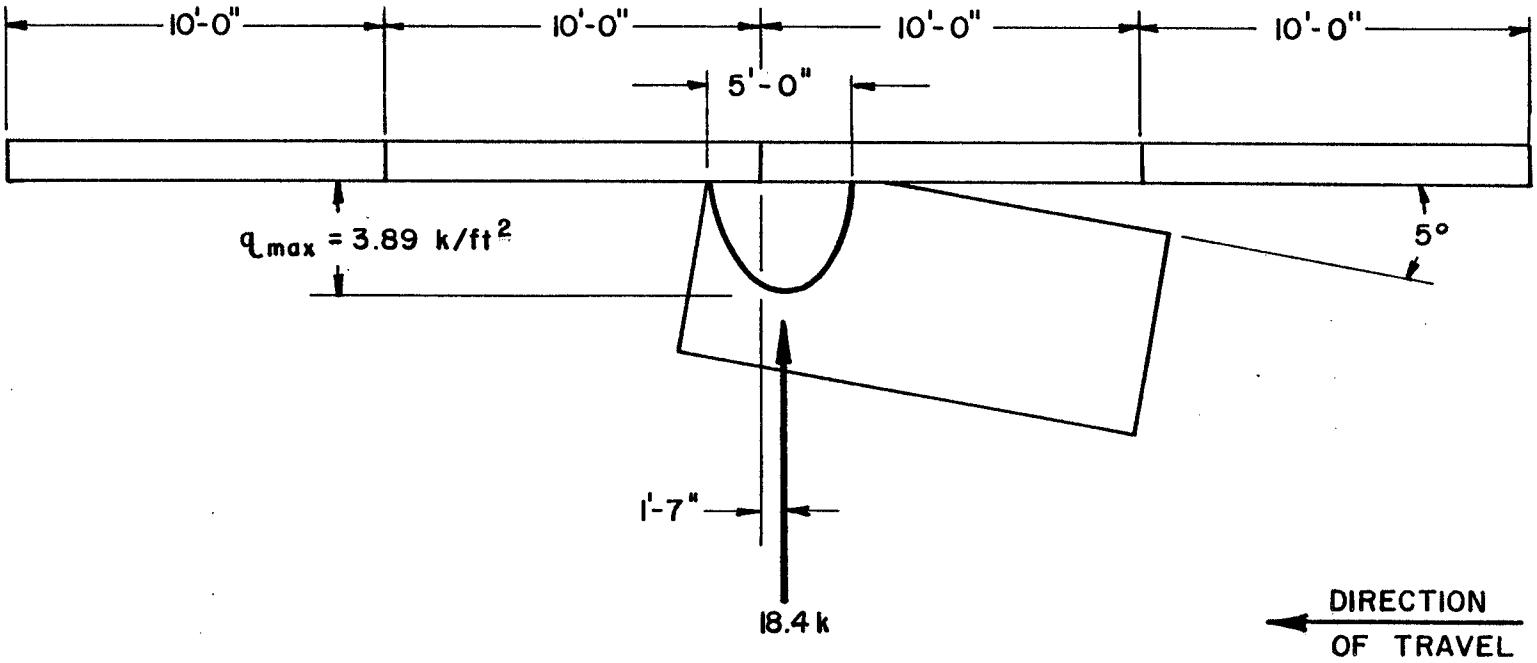

Length of Contact Area
L = 5 ft 0 in.

Depth of Contact Area
D = (17 in. - 3 in.)x2 = 2 ft 4 in.

Maximum Contact Intensity

$$q_{max} = R \frac{\pi^2}{4DL} = 3.89 \text{ k/ft}^2$$

Figure E-15 . Sketch Indicating the Maximum Pressure for Initial Impact for 2,050 lb (Honda), 59.0 mph, 15.5 deg.

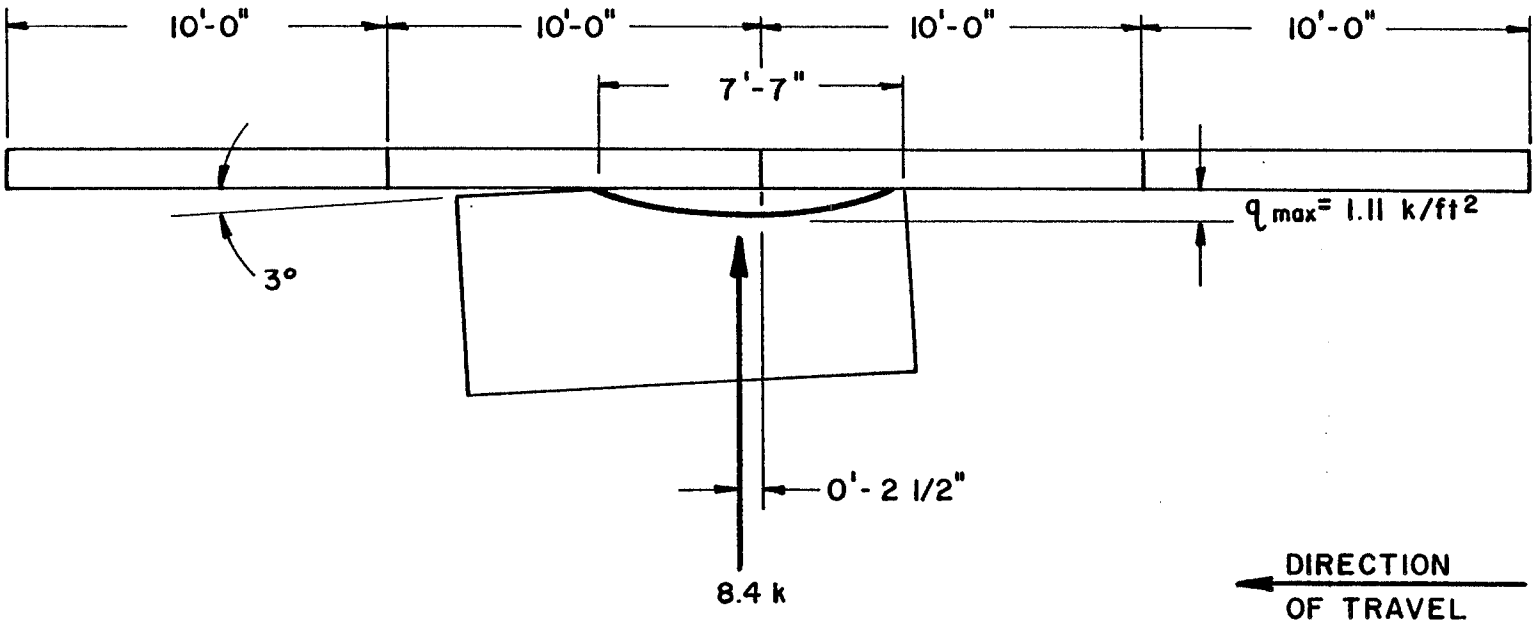

Length of Contact Area
L = 7 ft 7 in.

Dept of Contact Area
D = (18.7 in. - 3 in.) 2 = 2 ft 7 in.

Maximum Contact Intensity

$$q_{max} = R \frac{\pi 2}{4DL} = 1.11 \text{ k/ft}^2$$

Figure E-16 . Sketch Indicating the Maximum Pressure for Final Impact for 2,050 lb (Honda), 59 mph, 15.5 deg.

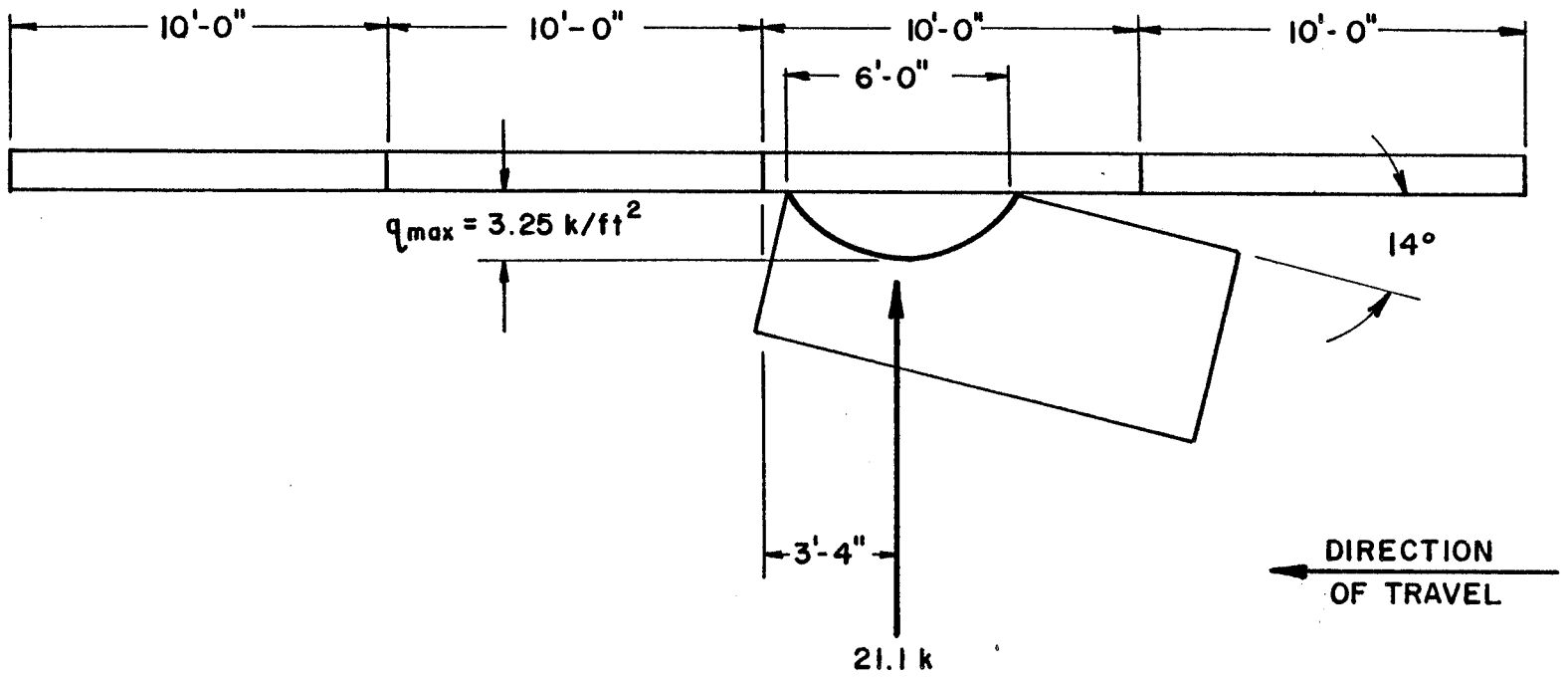

Length of Contact Area
L = 6 ft 0 in.

Depth of Contact Area
D = (19 in. - 3 in.)2 = 2 ft 8 in.

Maximum Contact Intensity

$$q_{max} = R \frac{\pi^2}{4DL} = 3.25 \text{ k/ft}^2$$

Figure E-17. Sketch Indicating the Maximum Pressure for Initial Impact for 2,090 lb (Homda), 58.5 mph, 21.0 deg.

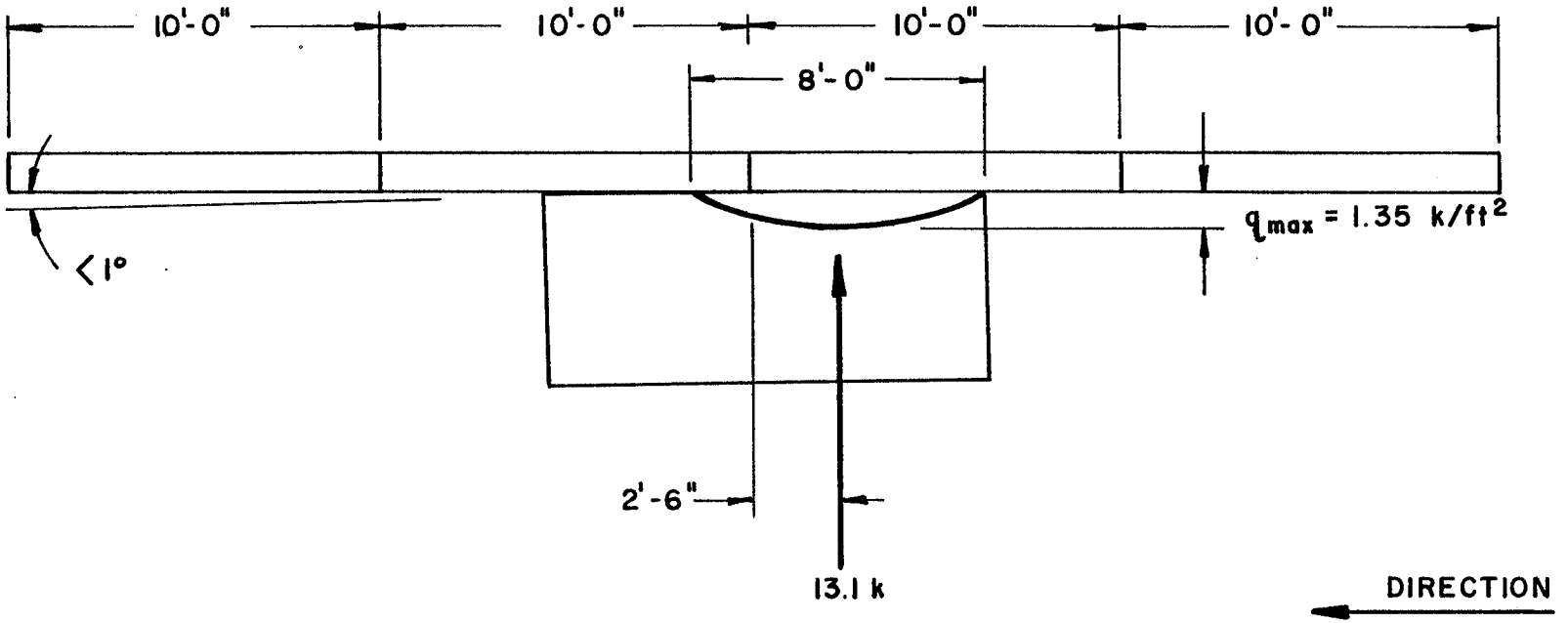

Length of Contact Area
L = 8 ft 0 in.

Depth of Contact Area
D = (20.7 in. - 3 in.)^2 = 3 ft 0 in.

Maximum Contact Intensity

$$q_{max} = R\frac{\pi^2}{.4DL} = 1.35 \text{ k/ft}^2$$

E-18
Figure . Sketch Indicating the Maximum Pressure for Final Impact for 2,090 lb (Honda), 58.5 mph, 21.0 deg.

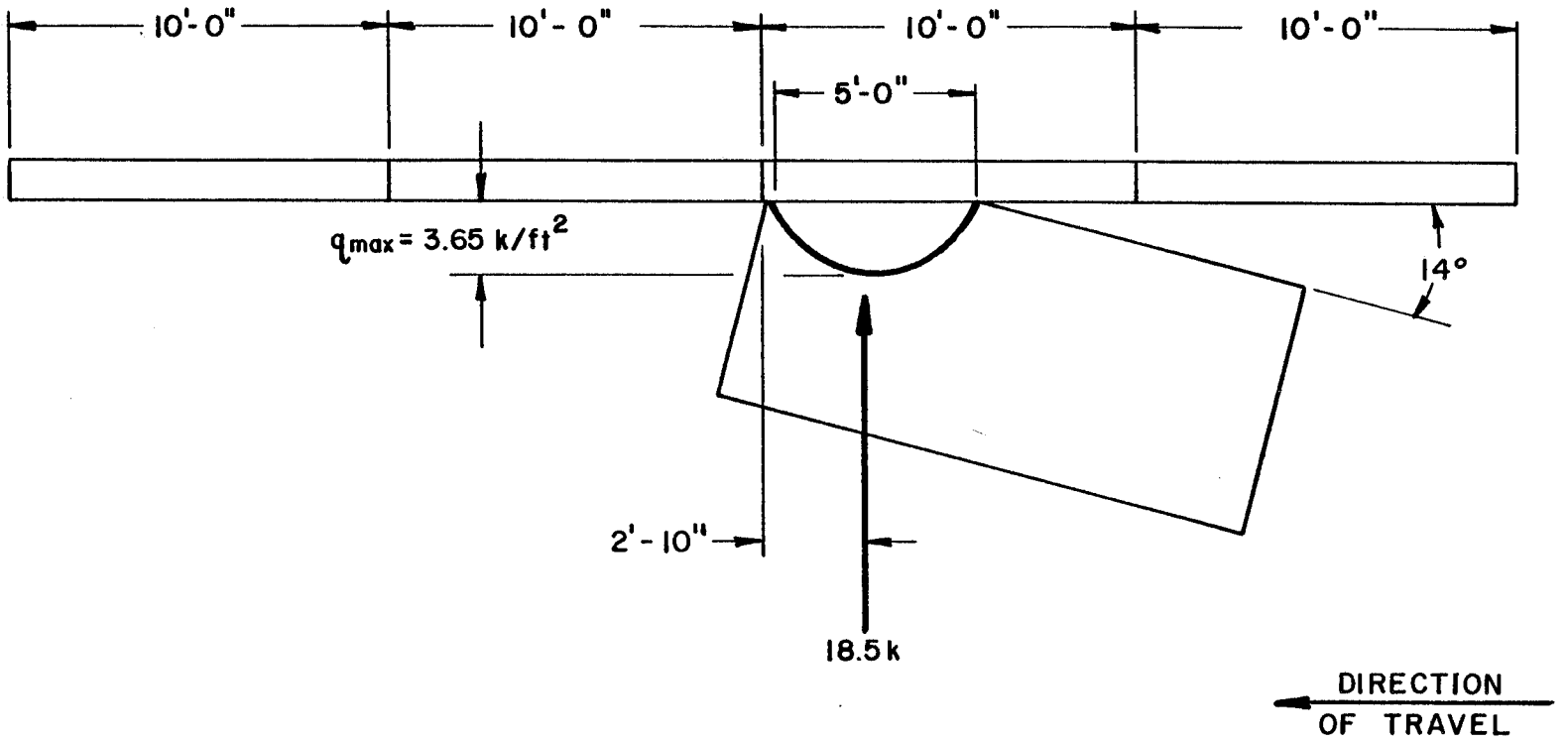

Length of Contact Area
L = 5 ft 0 in.

Depth of Contact Area
D = (18.1 in. - 3 in.)^2 = 2 ft 6 in.

Maximum Contact Intensity

$$q_{max} = R \frac{\pi^2}{4DL} = 3.65 \text{ k/ft}^2$$

Figure E-19. Sketch Indicating the Maximum Pressure for Initial Impact for 2,800 lb (Vega), 58.3 mph, 15.0 deg.

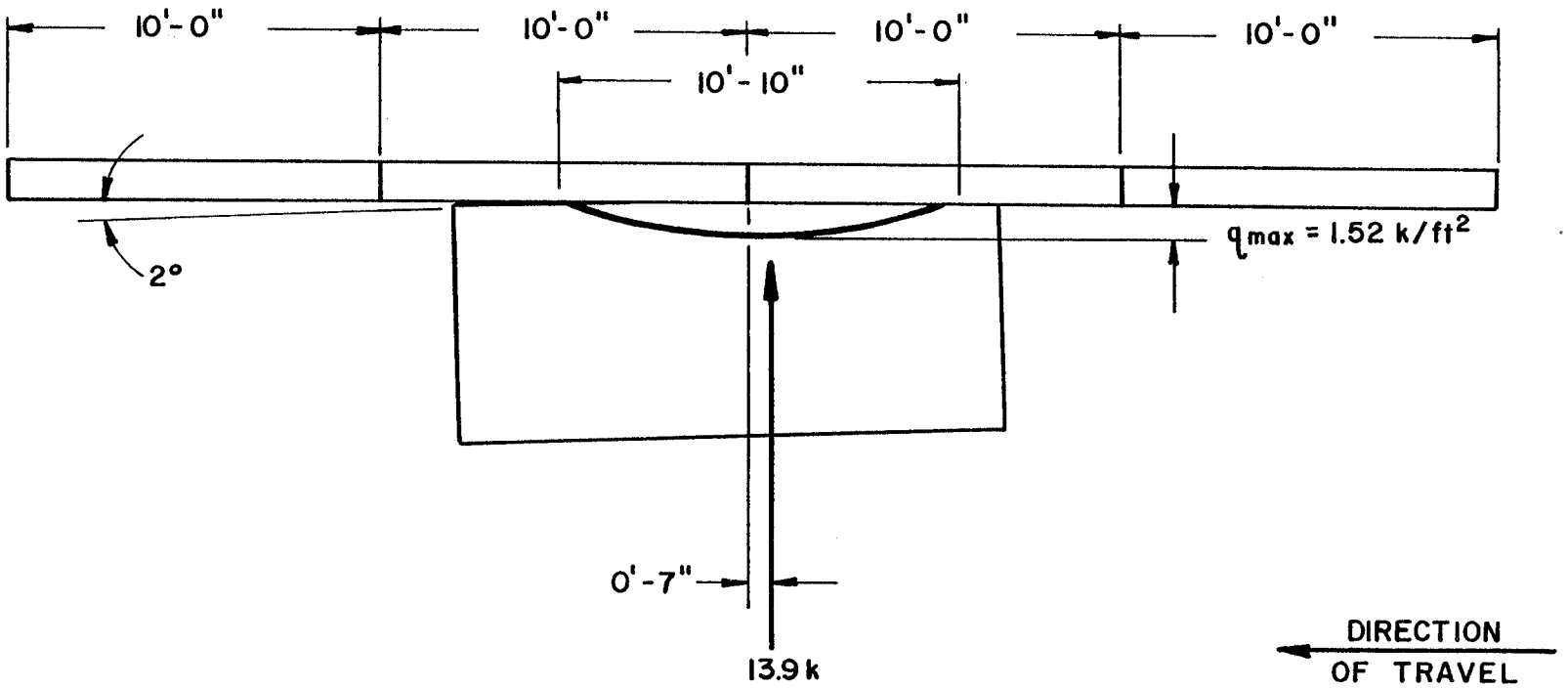

Length of Contact Area
L = 10 ft 10 in.

Depth of Contact Area
D = (15.3 in. - 3 in.)^2 = 2 ft 1 in.

Maximum Contact Intensity

$$q_{max} = R \frac{\pi^2}{4DL} = 1.52 \text{ k/ft}^2$$

Figure E-20. Sketch Indicating the Maximum Pressure for Final Impact for 2,800 lb (Vega), 58.3 mph, 15.0 deg.

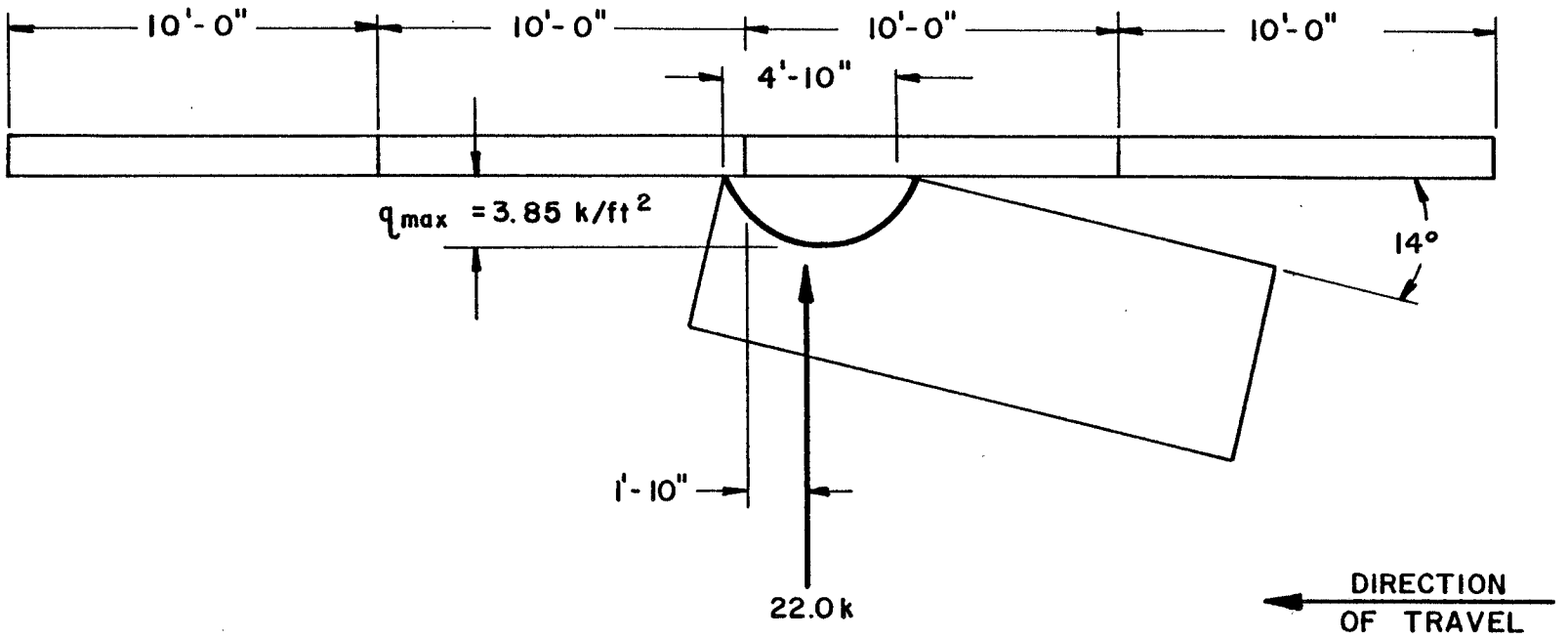

Length of Contact Area
L = 4 ft 10 in.

Depth of Contact Area
D = (19.3 in. - 3 in.) 2 = 2 ft 11 in.

Maximum Contact Intensity

$$q_{max} = R \frac{\Pi^2}{4DL} = 3.85 \text{ k/ft}^2$$

Figure E-21. Sketch Indicating the Maximum Pressure for Initial Impact for 2,830 lb (Vega), 56.0 mph, 18.5 deg.

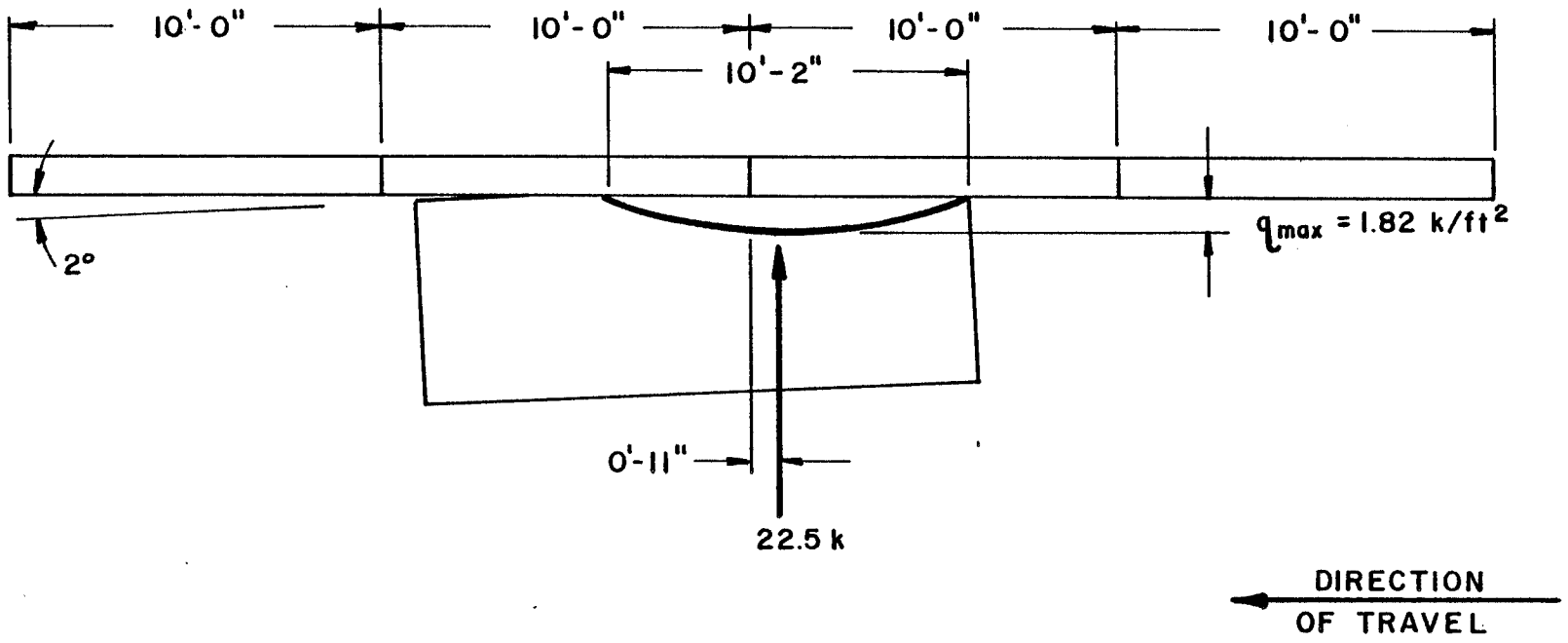

Length of Contact Area
L = 10 ft 2 in.

Depth of Contact Area
D = (21.3 in. - 3 in.) 2 = 3 ft 0 in.

Maximum Contact Intensity

$$q_{max} = R \frac{\pi^2}{4DL} \quad 1.82 \text{ k/ft}^2$$

Figure E-22. Sketch Indicating the Maximum Pressure for Final Impact for 2,830 lb (Vega), 56.0 mph, 18.5 deg.

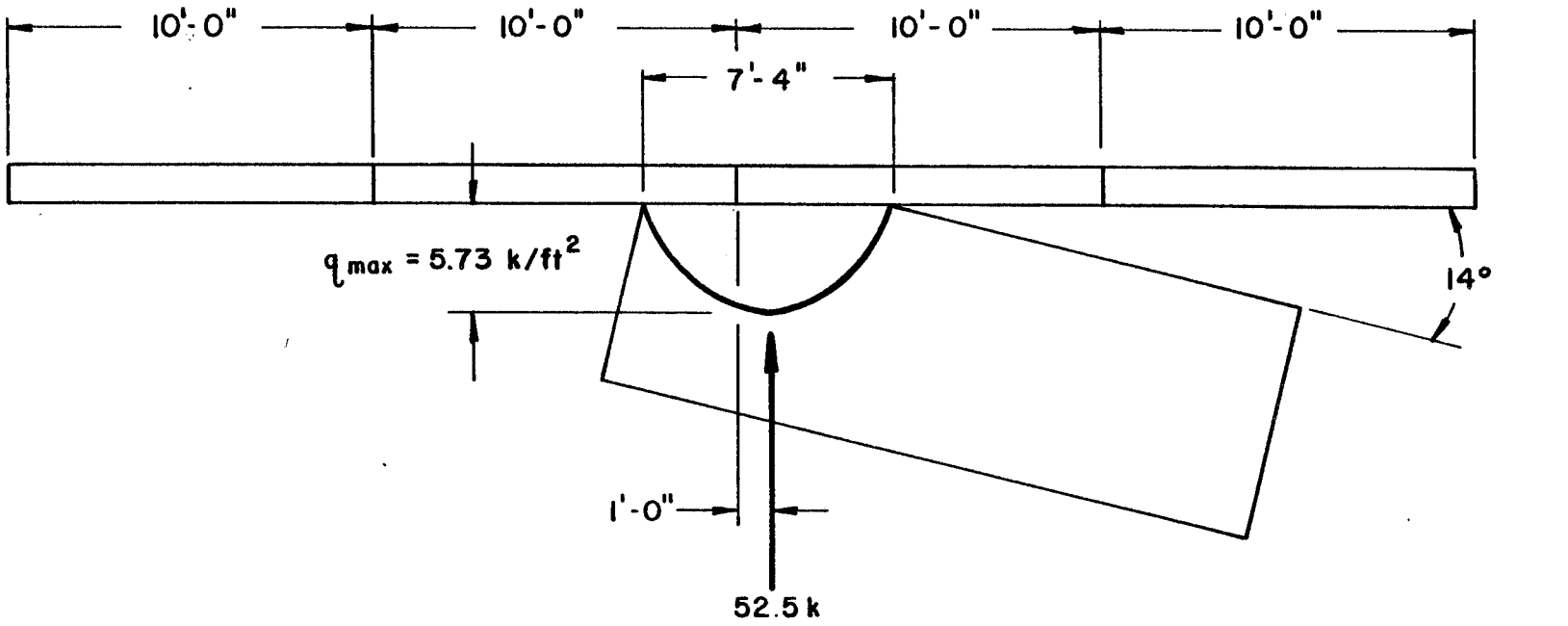

Length of Contact Area
L = 7 ft 4 in.

Depth of Contact Area
D = (21.4 in. - 13 in.) 2 = 3 ft 1 in.

Maximum Contact Intensity

$$q = R \frac{\pi^2}{4DL} = 5.73 \text{ k/ft}^2$$

Figure E-23. Sketch Indicating the Maximum Pressure for Initial Impact for 4,680 lb (Plymouth), 52.9 mph, 15.0 deg.

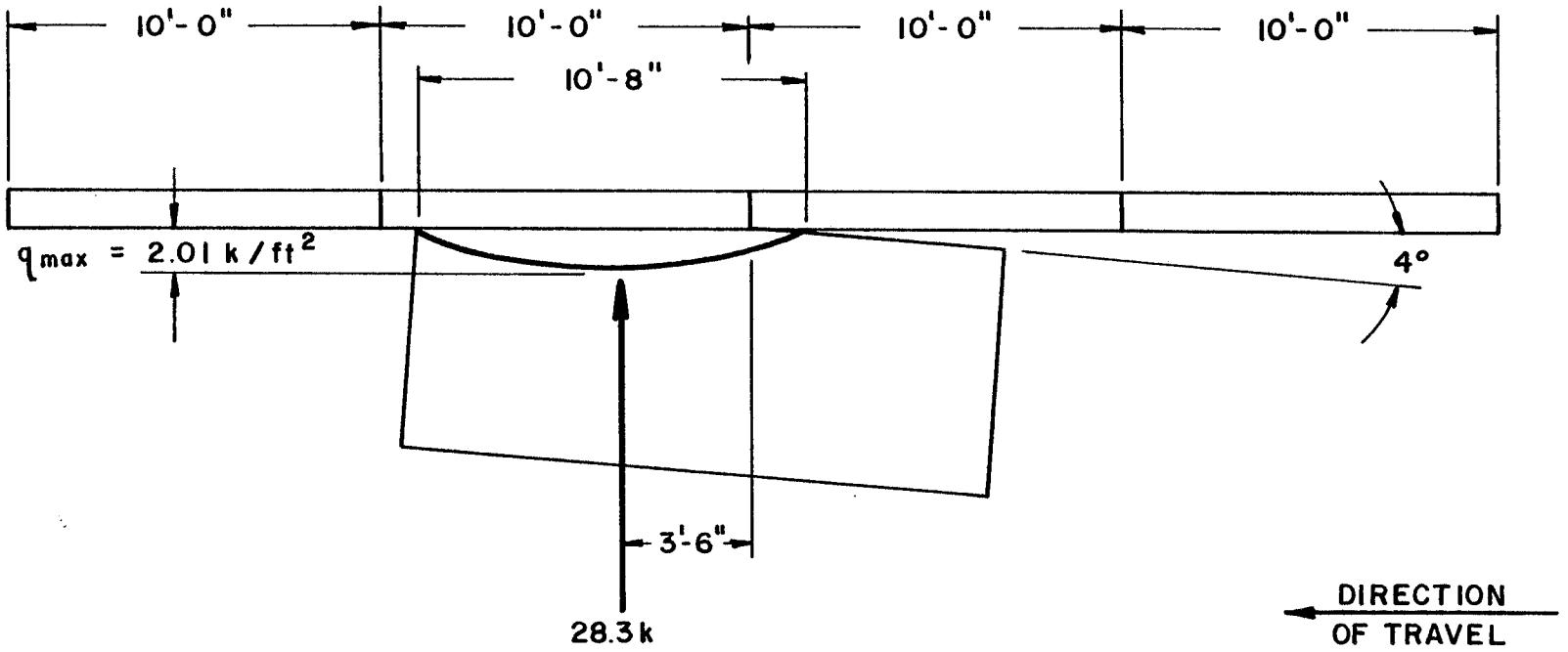

Q4-3

Length of Contact Area
L = 10 ft 8 in.

Depth of Contact Area
D = (24 in. - 3 in.) 2 = 3 ft 3 in.

Maximum Contact Intensity

$$q = R \frac{\Pi^2}{4DL} = 2.01 \text{ k/ft}^2$$

E-24

Figure . Sketch Indicating the Maximum Pressure for Final Impact for 4,680 lb (Plymouth), 52.9 mph, 15.0 deg.

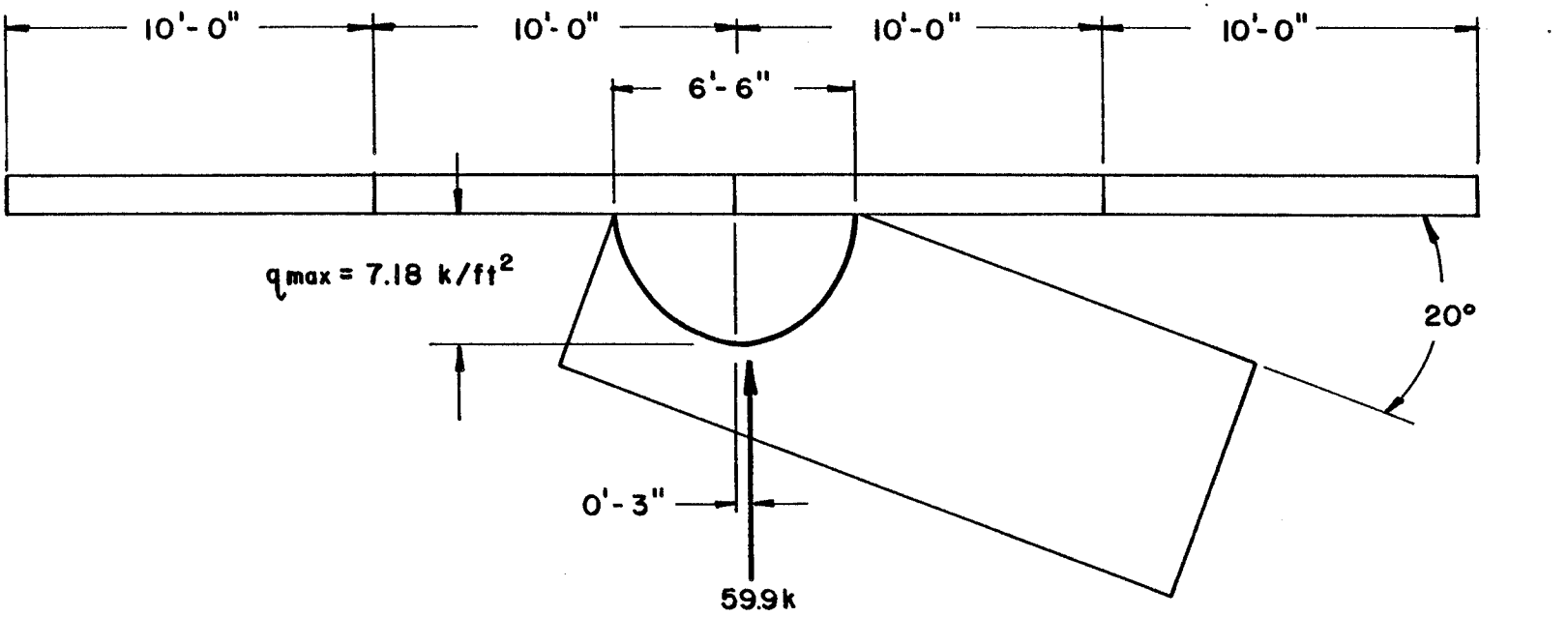

Length of Contact Area
L = 6 ft 6 in.

Depth of Contact Area
D = (21.8 - 3) 2 = 3 ft 2 in.

Maximum Contact Intensity

$$q = R \frac{\pi^2}{4DL} = 7.18 \text{ k/ft}^2$$

Figure E-25. Sketch Indicating the Maximum Pressure for Initial Impact for 4,740 lb (Plymouth), 59.9 mph, 24.0 deg.

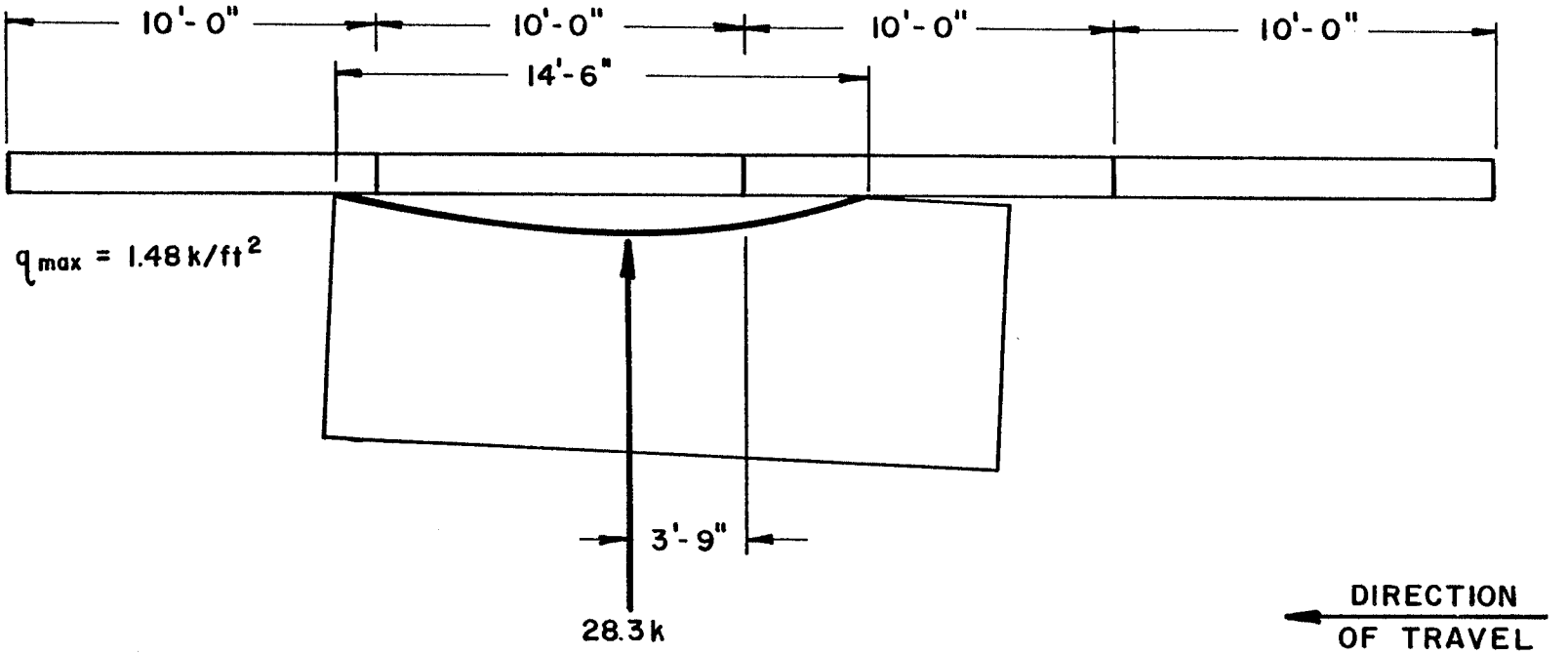

24-3

Length of Contact Area
L = 14 ft 6 in.

Dept of Contact Area
D = (22.5 in. - 3 in.) 2 = 3 ft 3 in.

Maximum Contact Intensity

$$q_{max} = R \frac{\pi^2}{4DL} = 1.48 \text{ k/ft}^2$$

Figure E-26. Sketch Indicating the Maximum Pressure for Final Impact for 4,740 lb (Plymouth), 59.9 mph, 24.0 deg.

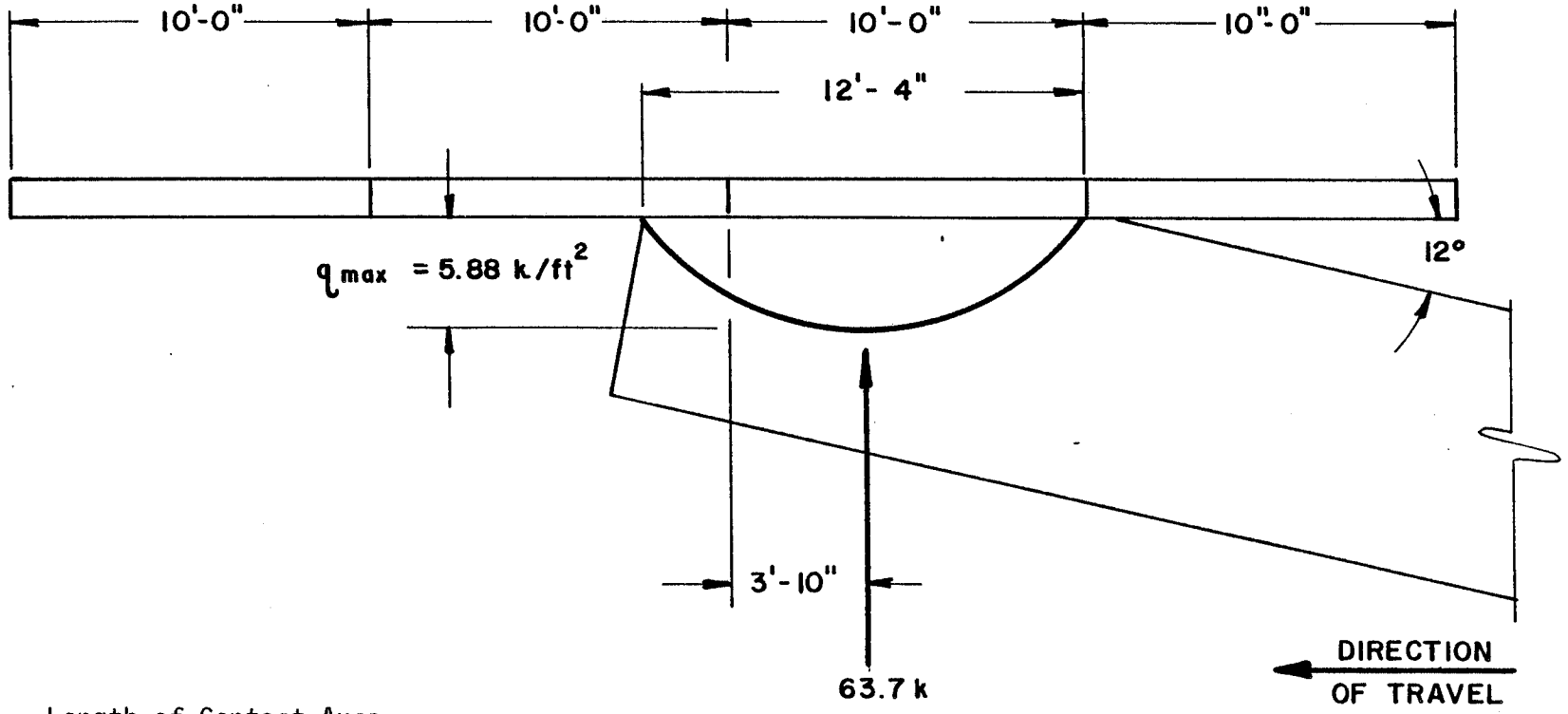

Length of Contact Area
L = 12 ft 4 in.

Depth of Contact Area
D = (42 in. - 29 in.)2 = 2 ft 2 in.

Maximum Contact Intensity

$$q = R\frac{\pi^2}{4DL} = 5.88 \text{ k/ft}^2$$

Figure A-27. Sketch Indicating the Maximum Pressure for Initial Impact for 20,030 lb (School Bus), 57.6 mph, 15.0 deg.

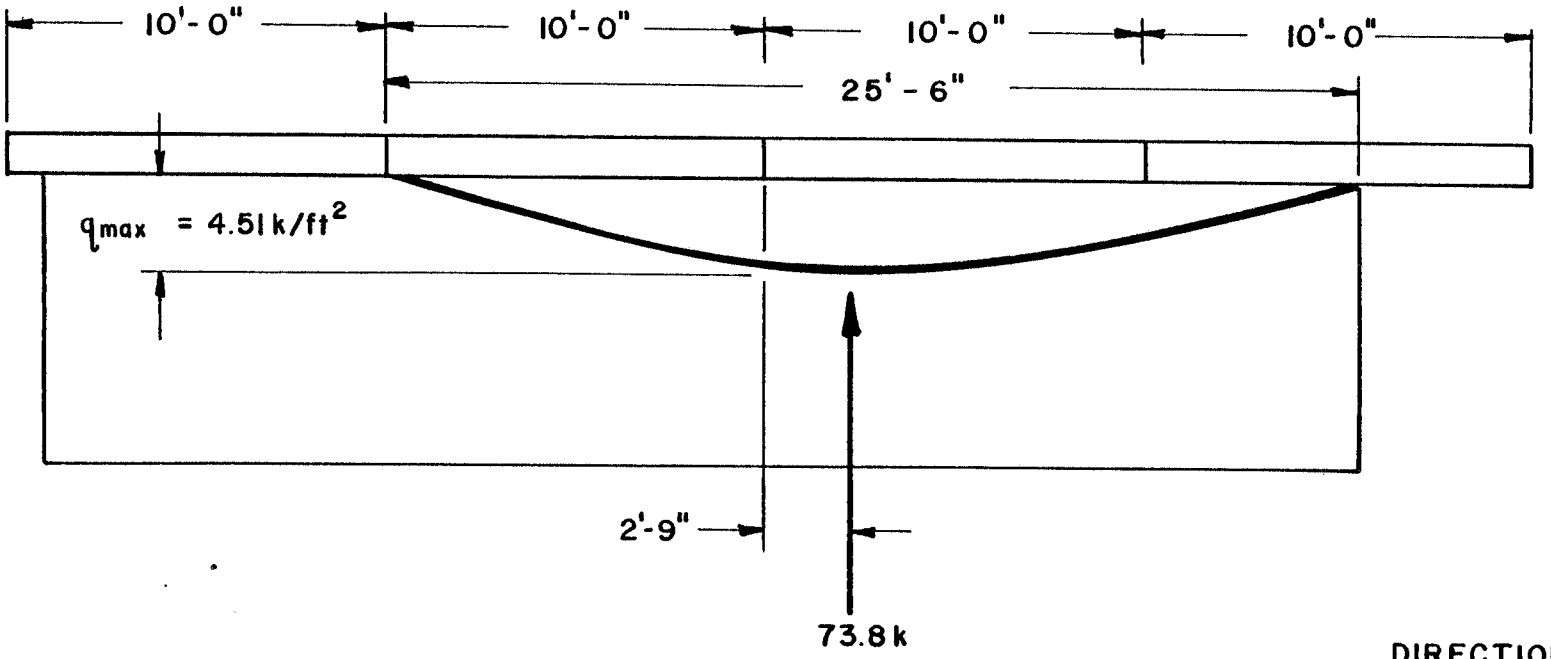

Length of Contact Area
L = 25 ft 6 in.

Depth of Contact Area
D = (42 in. - 32.7 in.)2 = 1 ft 7 in.

Maximum Contact Intensity

$$q = R \frac{\pi^2}{4DL} = 4.51 \text{ k/ft}^2$$

Figure E-28. Sketch Indicating the Maximum Pressure for Final Impact for 20,030 lb (School Bus), 57.6 mph, 15.0 deg.

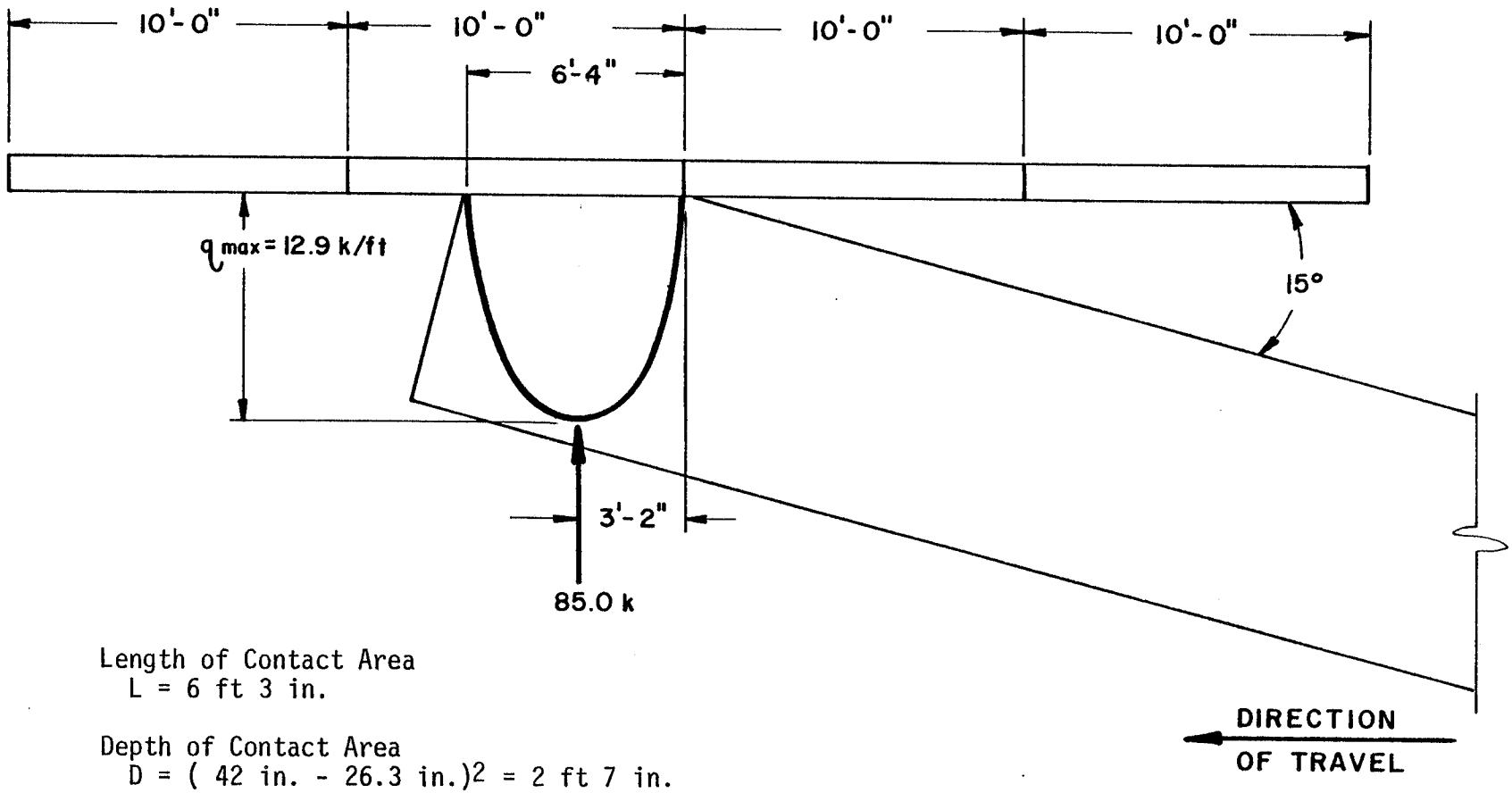

Length of Contact Area
L = 6 ft 3 in.

Depth of Contact Area
$D = (42 \text{ in.} - 26.3 \text{ in.})^2 = 2 \text{ ft } 7 \text{ in.}$

Maximum Contact Intensity

$$q = R \frac{\pi^2}{4DL} = 12.9 \text{ k/ft}^2$$

Figure E-29. Sketch Indicating the Maximum Pressure for Initial Impact for 32,020 (Intercity Bus), 60 mph, 15.0 deg.

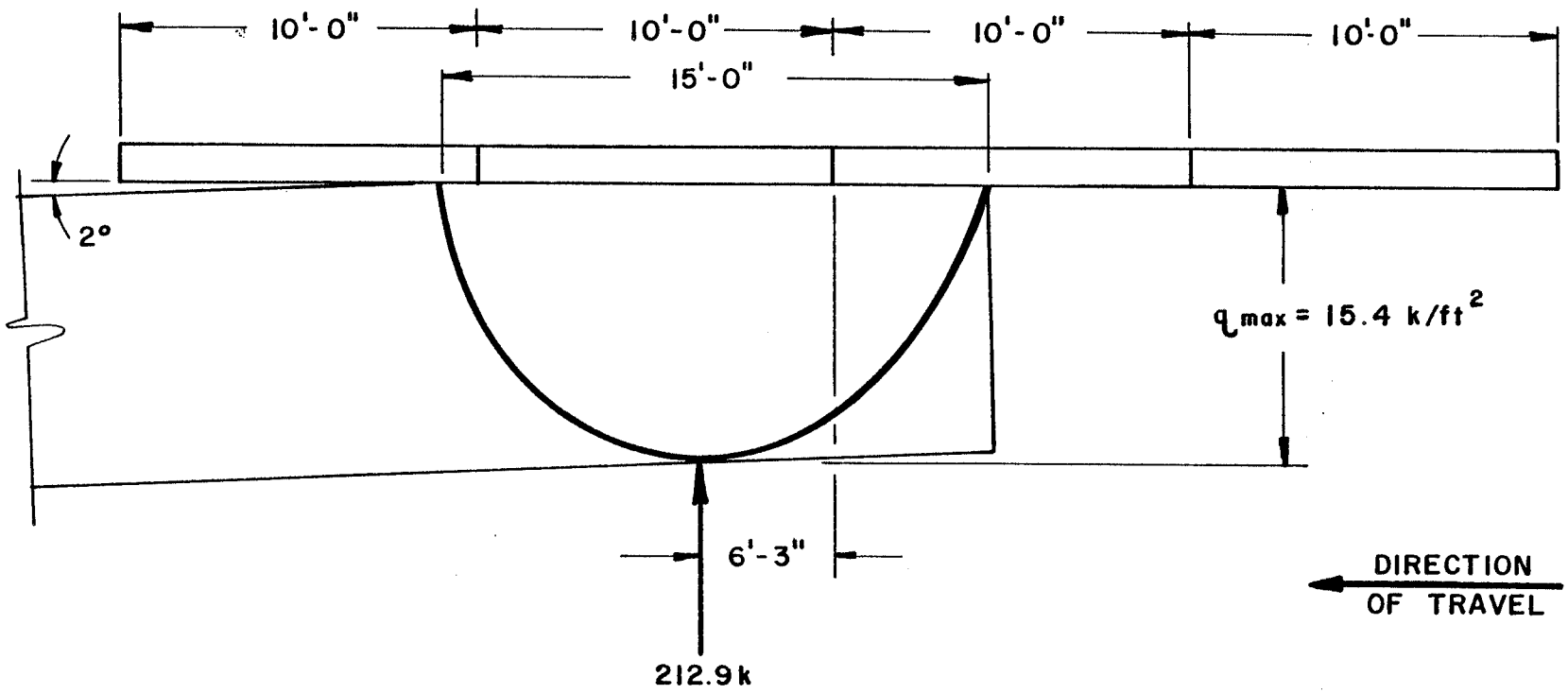

Length of Contact Area
L = 15 ft 0 in.

Depth of Contact Area
D = $(42" - 28.4")^2$ = 2' 3"

Maximum Contact Intensity
$q = R \frac{\pi^2}{4DL}$ = 15.4 k/ft^2

Figure E-30. Sketch Indicating the Maximum Pressure for Final Impact for 32,020 lb (Intercity Bus), 60 mph, 15.0 deg.

Table E-4. Maximum Contact Pressures Deduced from the Instrumented Wall Tests.

Test Condition	Initial Impact			Final Impact		
	Max. Contact Pressure (k/ft^2)	Length (ft)	Weight (ft)	Max. Contact Pressure (k/ft^2)	Length (ft)	Height (ft)
2,050 lb/59.0 mph/15.5 deg	3.89	5.00	2.33	1.11	7.58	2.58
2,090 lb/58.5 mph/21.0 deg	3.25	6.00	2.67	1.35	8.00	3.00
2,800 lb/58.3 mph/15.0 deg	3.85	5.00	2.50	1.82	10.83	2.08
2,830 lb/56.0 mph/18.5 deg	3.65	4.00	2.92	1.52	10.17	3.00
4,680 lb/52.9 mph/15.0 deg	5.73	7.33	3.08	2.01	10.67	3.25
4,740 lb/59.9 mph/24.0 deg	7.18	6.50	3.17	1.48	14.50	3.25
20,030 lb/57.6 mph/15.0 deg	5.88	12.33	2.17	4.51	25.50	1.58
32,020 lb/60.0 mph/15.0 deg	12.90	6.25	2.58	15.40	15.00	2.25

Table E-5. Maximum Force Per Unit Length of Railing from the Instrumented Wall Tests.

Test Condition	ISP (ft-k)	Initial Impact		Final Impact	
		Max. Force Per Unit Length (k/ft)	Length (ft)	Max. Force Per Unit Length (k/ft)	Length (ft)
2,050 lb/59.0 mph/15.5 deg	14.4	5.76	5.00	1.82	7.58
2,090 lb/58.5 mph/21.0 deg	26.0	5.52	6.00	2.58	8.00
2,800 lb/58.3 mph/15.0 deg	18.9	5.81	5.00	2.01	10.83
2 830 lb/56.0 mph/18.5 deg	26.5	7.61	4.00	3.48	10.17
4,680 lb/52.9 mph/15.0 deg	27.3	11.24	7.33	4.16	10.67
4,740 lb/59.9 mph/24.0 deg	87.6	14.49	6.50	3.06	14.50
20,030 lb/57.6 mph/15.0 deg	96.7	8.12	12.33	4.54	25.50
32,020 lb/60.0 mph/15.0 deg	166.5	21.20	6.25	22.10	15.00

a parameter defined as the Impact Severity Potiential (ISP).

Test conducted on in-service railing designs also provide useful information for establishing loading conditions for railing systems.

Vehicle lateral accelerations were analyzed in a attempt to establish general relationships concerning forces generated for various impact conditions. One measure of lateral force imposed on a railing system was obtained by multiplying the highest 0.050 sec average lateral acceleration of the vehicle by its test inertia mass. Values obtained thusly are plotted against Impact Severity Potiential (ISP) for each of the railing systems and the instrumented wall in Figures E-33 through E-38. The Impact Severity Potiential is a quantification of the potiential of the vehicle for generating lateral force during a collision under the given test conditons. The actual force that is generated is a function of the response of the railing system. If the railing system is of adequate height and its geometry is such that a clean smooth redirection is achieved, the primary response feature of the railing system, in terms of force generated, is the flexibility of the railing system.

If tests on in-service railings wherein significant or large deflections occurred are ignored, then a line through the orgin and with a slope of 0.75 kips/ft-kip represents the data reasonably well. Such lines are shown for each of the in-service railing systems. The effect of flexibility of the railing, as measured by deflection, is indicated by the distance that those data points fall below the line shown.

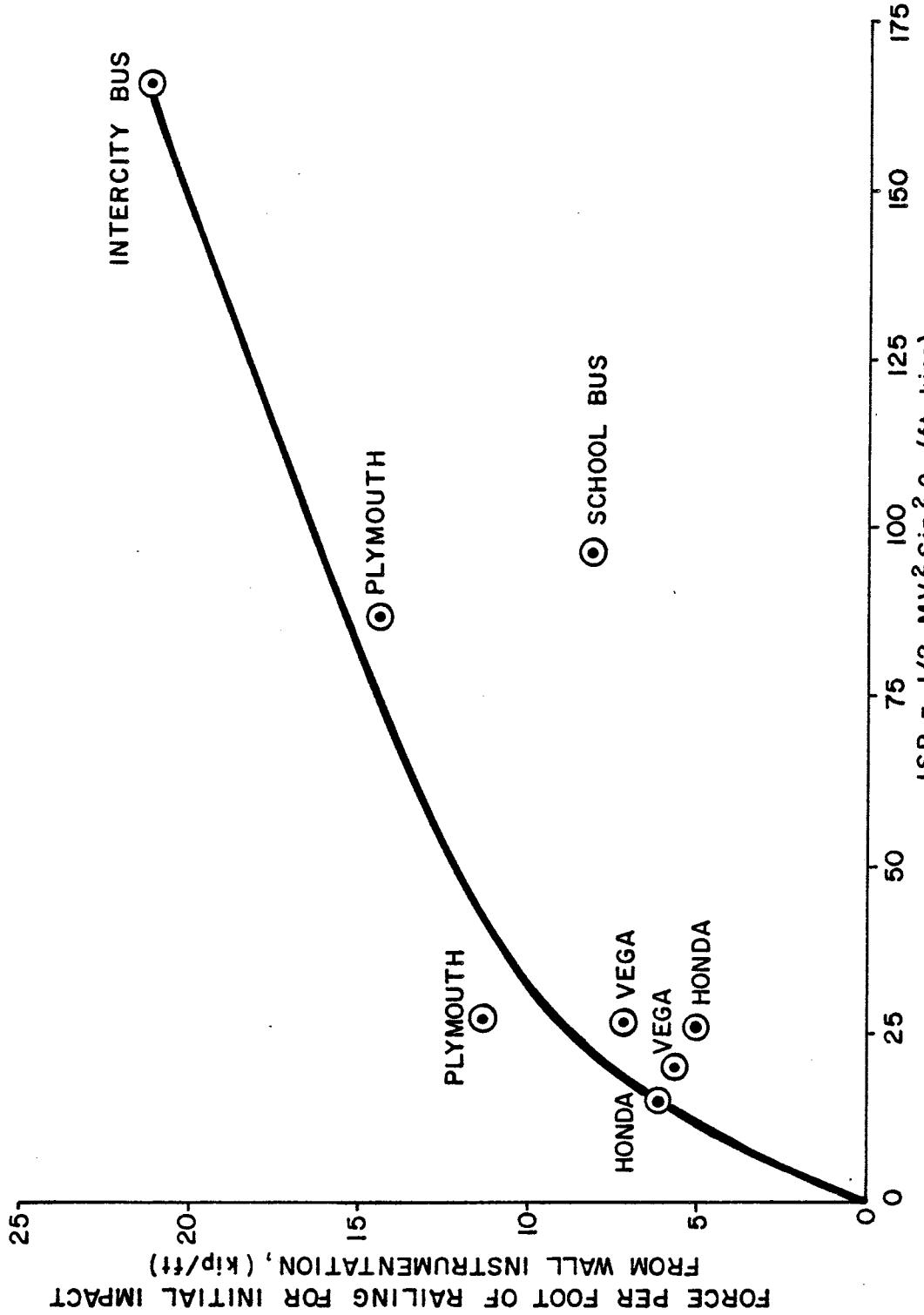

Figure E-31. Force Per Unit Length of Railing Derived From Tests on Instrumented Wall.

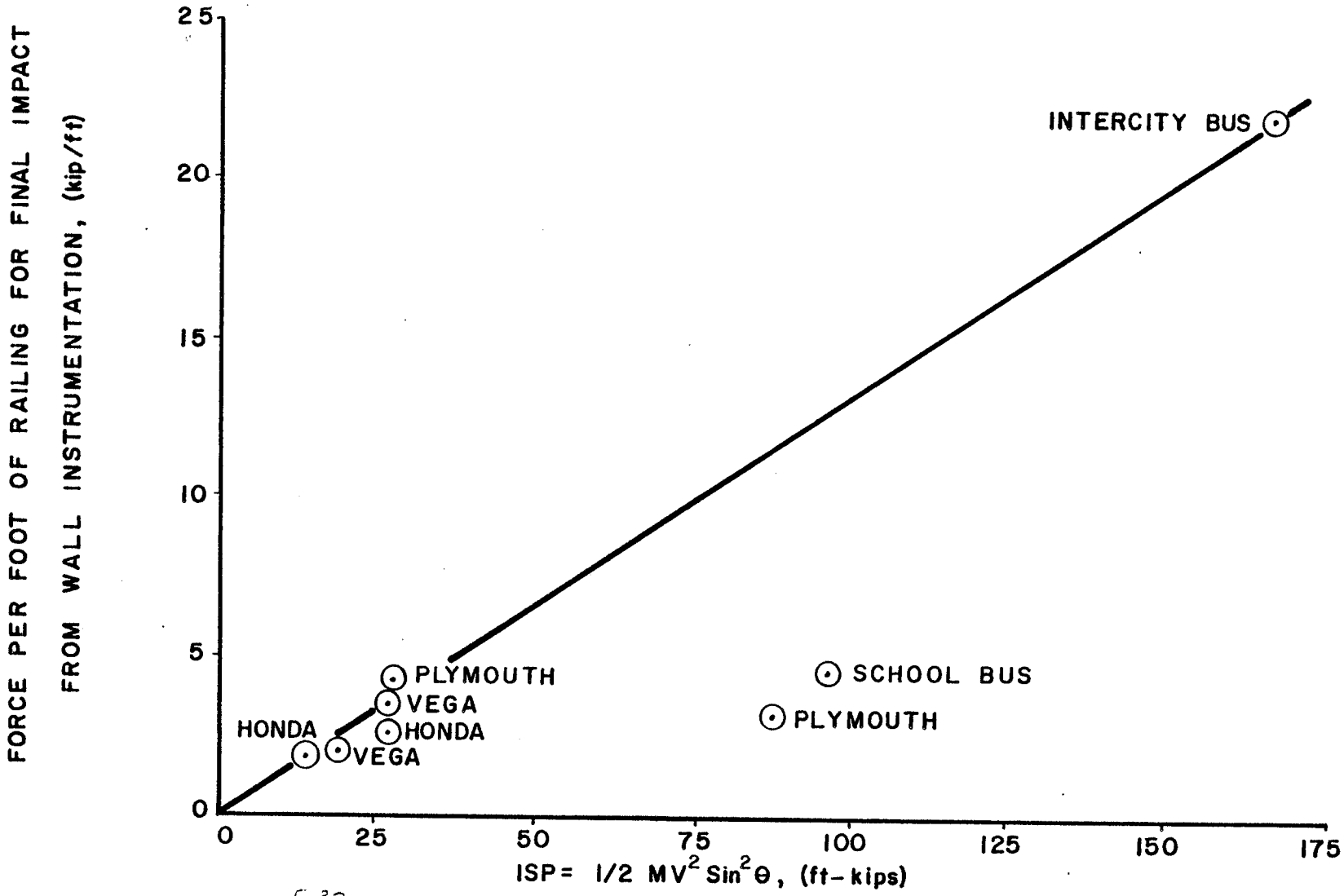

E-32

Figure . Force Per Unit Length of Railing Derived From Tests on Instrumented Wall.

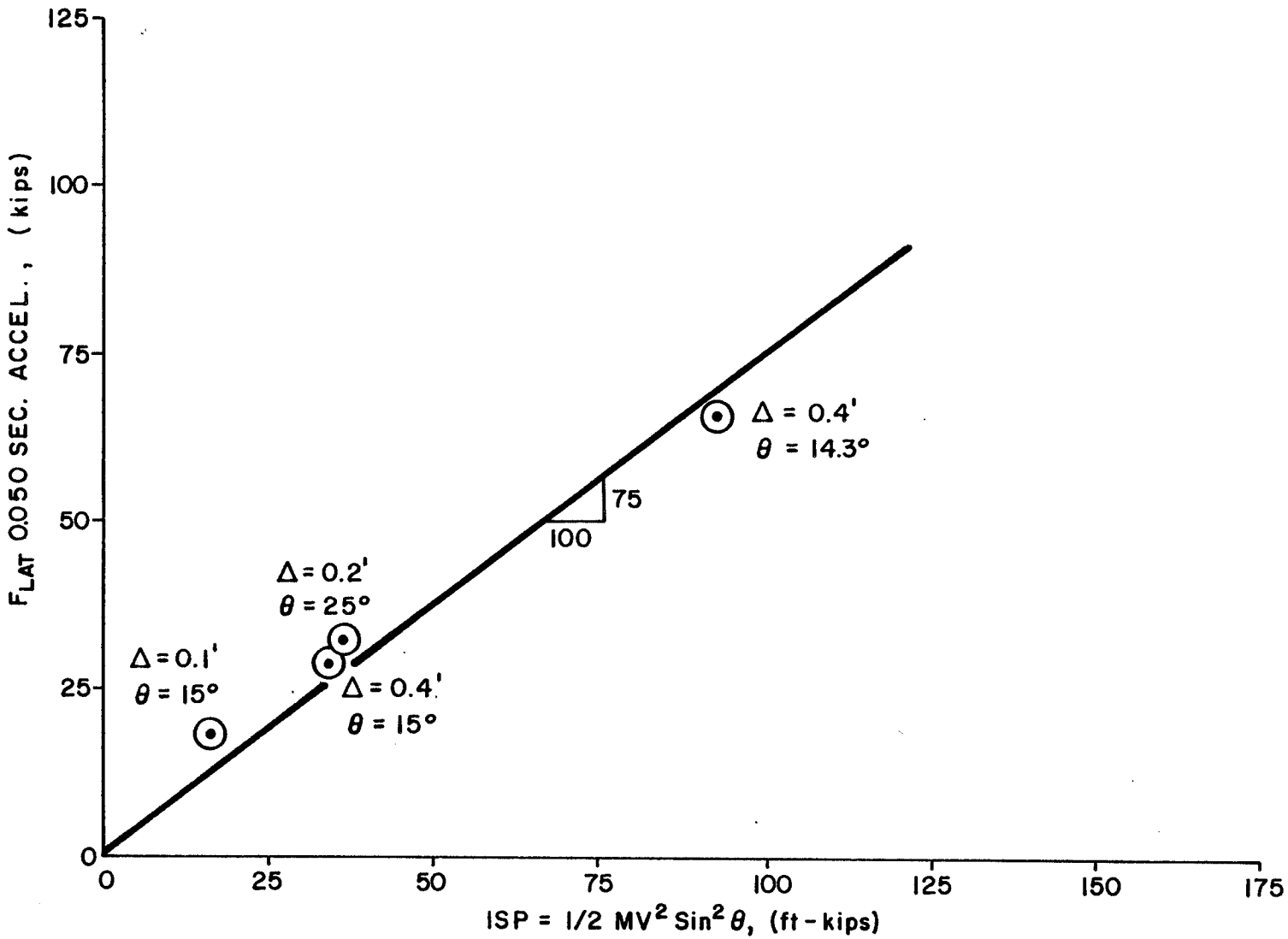

Figure E-33. Relationship between Maximum 0.050 sec Average Lateral Force and Impact Severity Potential for Tests on Colorado Type 5 Railing System.

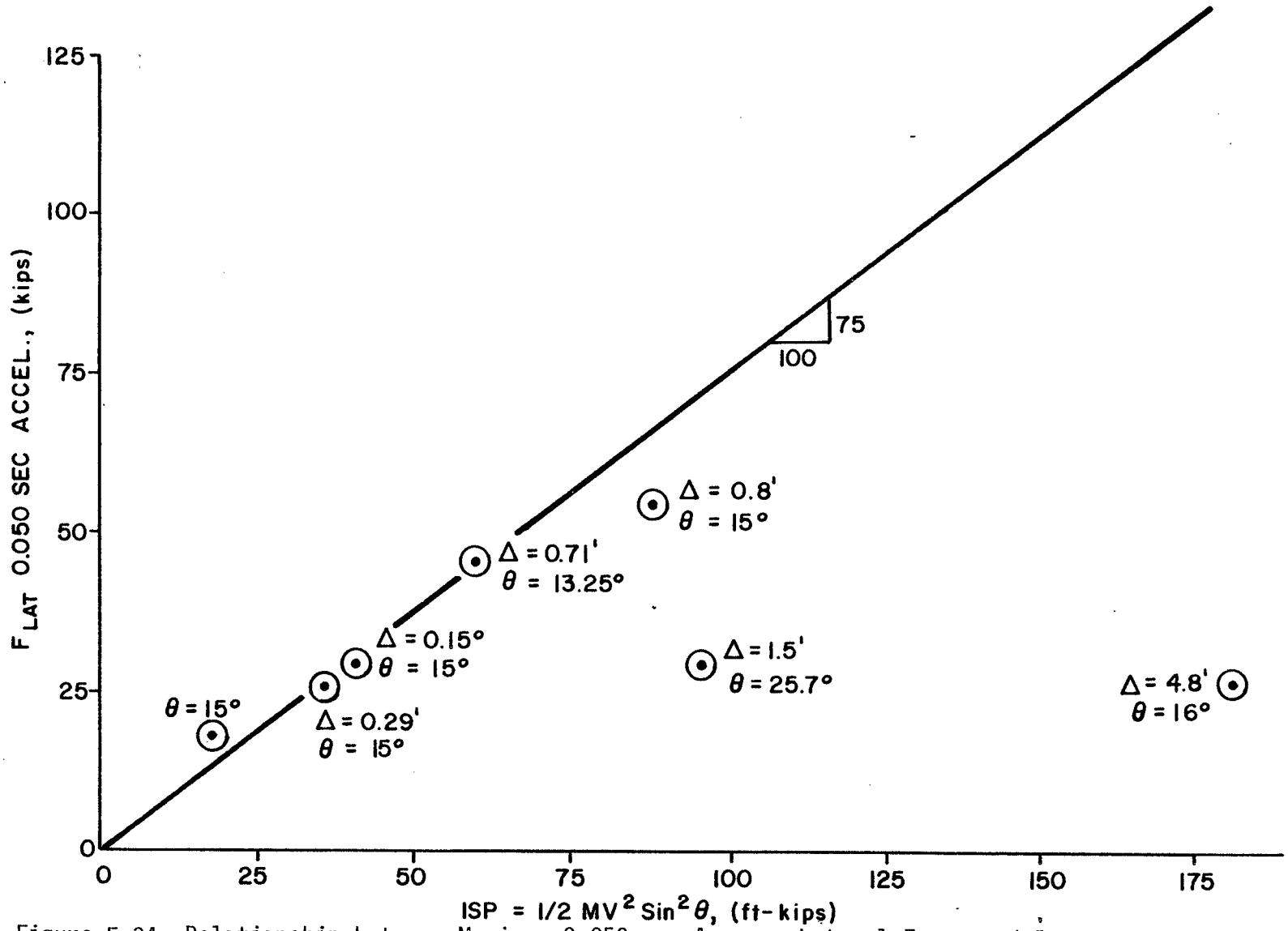

Figure E-34. Relationship between Maximum 0.050 sec Average Lateral Force and Impact Severity Potential for Test on Texas T101 Railing System.

Missing

pgs.

E-54-57

Data from the test series on the instrumented wall (Figure E-38) show that somewhat higher forces were generated for a given Impact Severity Potiential. In Figure E-38 the dashed line has a slope of 0.75 kips/ft-kip, the same as those for the in-service railings. Also shown in Figure E-38 is a line with a slope of 0.112 kips/ft-kip, which better represents the high side of the data points. The higher forces generated in tests on the wall are explained by the fact the solid faced wall, as opposed to a railing system with openings, caused the effective vehicle crush stiffness to be greater and the forces generated are therefore greater.

Comparisons of data from wall instrumentation and vehicle mounted accelerometers are made in Figures E-39 and E-40. Highest 0.050 sec averages for initial impacts are compared in Figure E-40. The vehicle test inertia mass was used to arrive at forces from vehicle instrumentation. The rather high degrees of correlation lends creditability to both sets of values and further indicates that it would be reasonable to 0.050 sec average acceleration values from other tests for determining load magnitudes.

The measured forces that are presented are dynamic impact forces which are significantly higher than service loads which have been used in designing railing systems in the past. Designing railing systems for the dynamic impact forces using allowable strengths of materials and static/elastics procedures would result in far too much conservatism and excessive costs.

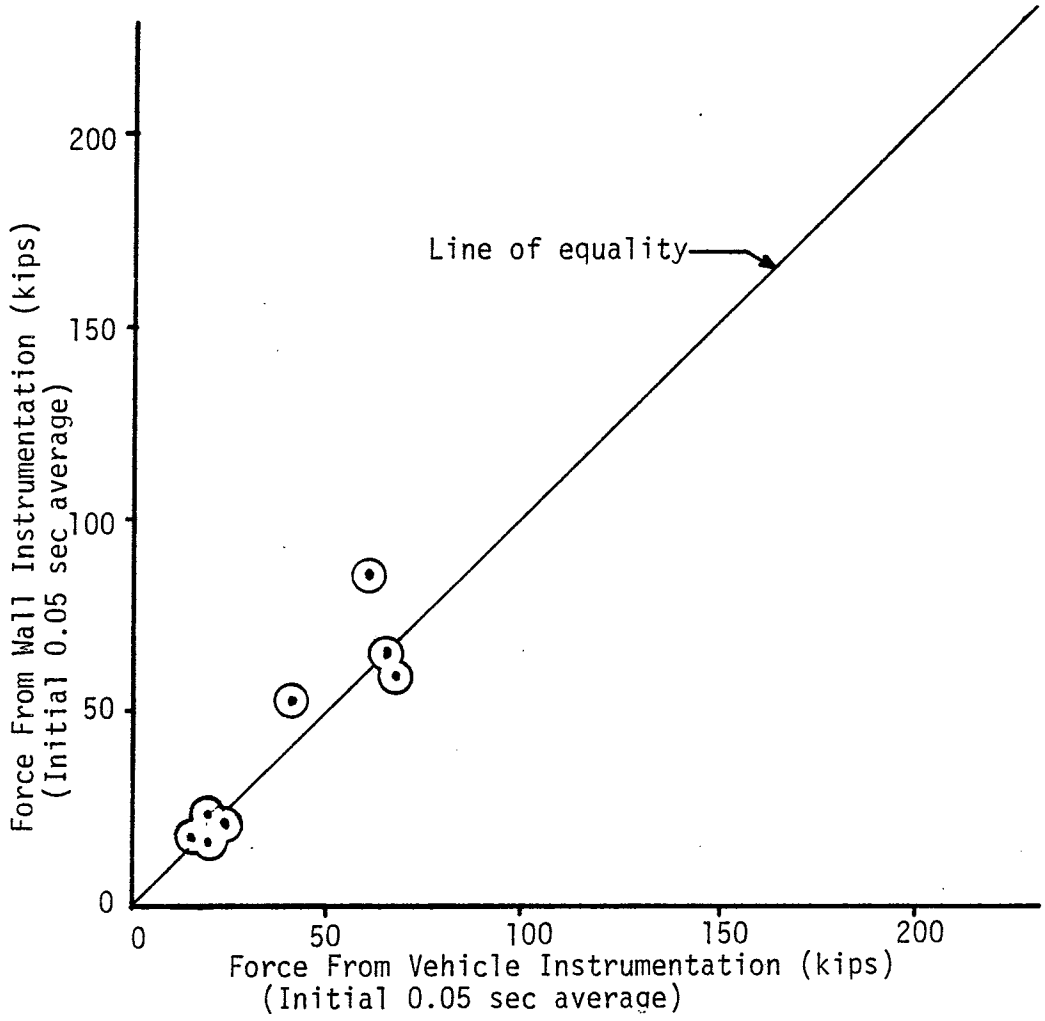

Figure E-39. Comparison of Forces from Wall Instrumentation with Forces from Vehicle Instrumentation for Initial Impact Using Vehicle Test Inertia Mass.

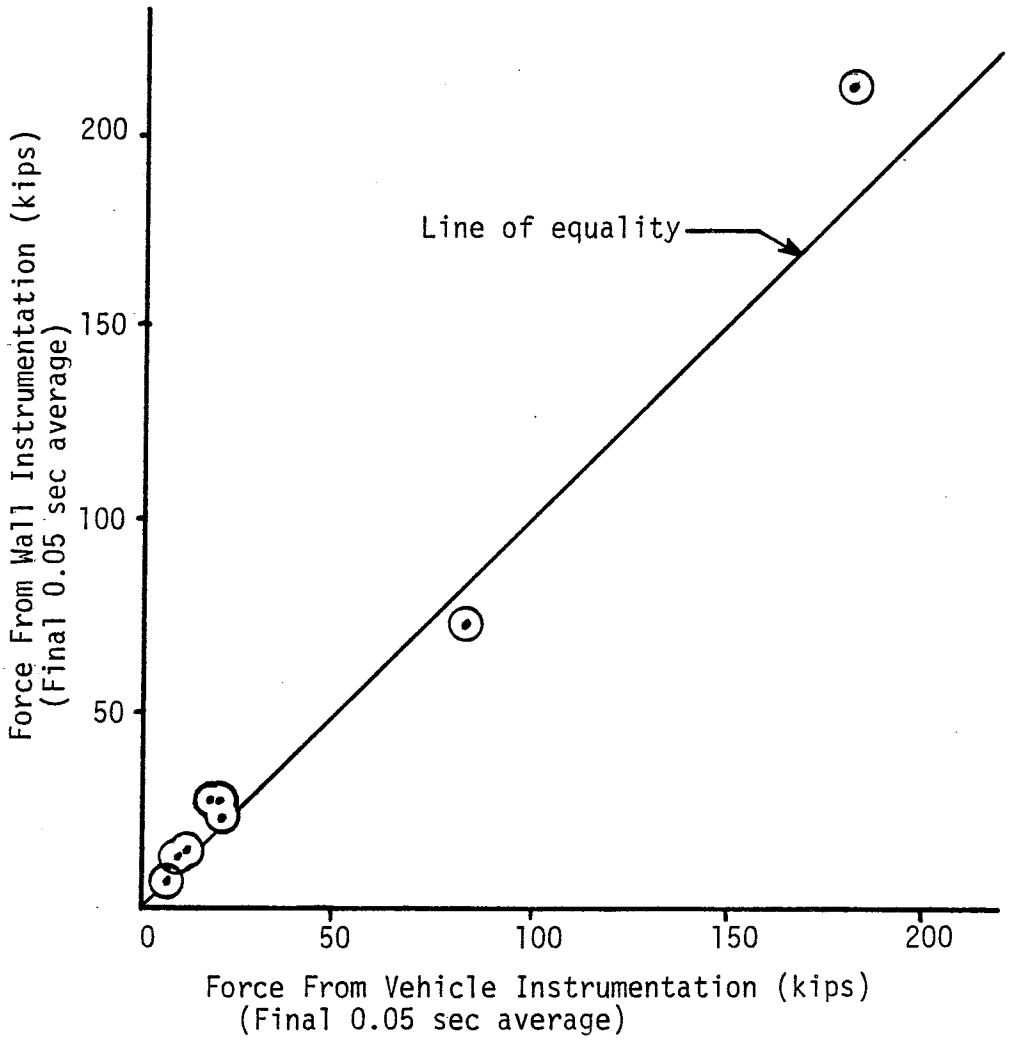

Figure E-45. Comparison of Forces from Wall Instrumentation with Forces from Vehicle Instrumentation for Final Impact Using Vehicle Test Inertia Mass.

It is recommended that ultimate strength failure mechanism design procedures and the dynamic impact forces presented in Table E-6 with no additional factor of safety be used for designing bridge railing systems. Failure mechanisms that are appropriate for the different sizes of vehicles and types of railing may be determined from full-scale crash tests reported herein and in other reports (6, 7).

III-3

Table ~~E-6~~. Recommended Ultimate Design Loads for Bridge Railings.

Impact Condition	Rigid Railing*			Flexible Railing**		
	Max. Design Load (k/ft)	Length Of Load (ft)	Height (in)	Design Load (k/ft)	Length Of Load (ft)	Height (in)
4,500 lb/60 mph/25 deg	11.24	7.33	24	7.16	7.16	24
20,000 lb/60 mph/15 deg	4.54	25.50	34	2.89	25.50	34
32,000 lb/60 mph/15 deg	22.10	15.00	30	14.07	15.00	30
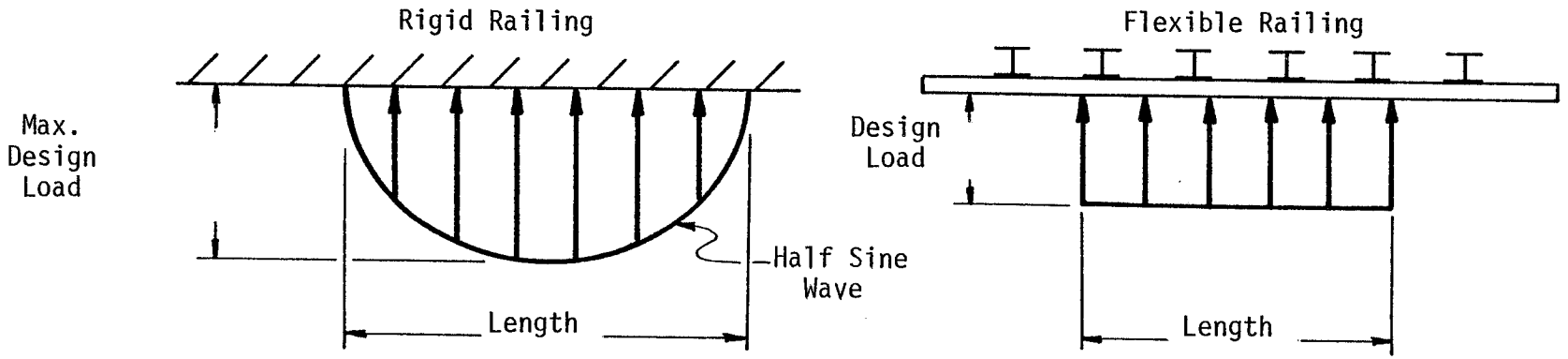
*Such as concrete parapet
**Railing systems that are expected to deflect 6 to 18 in.